Assembly Manual

5 Section Field Cultivator

4000361193 / JAN 2024

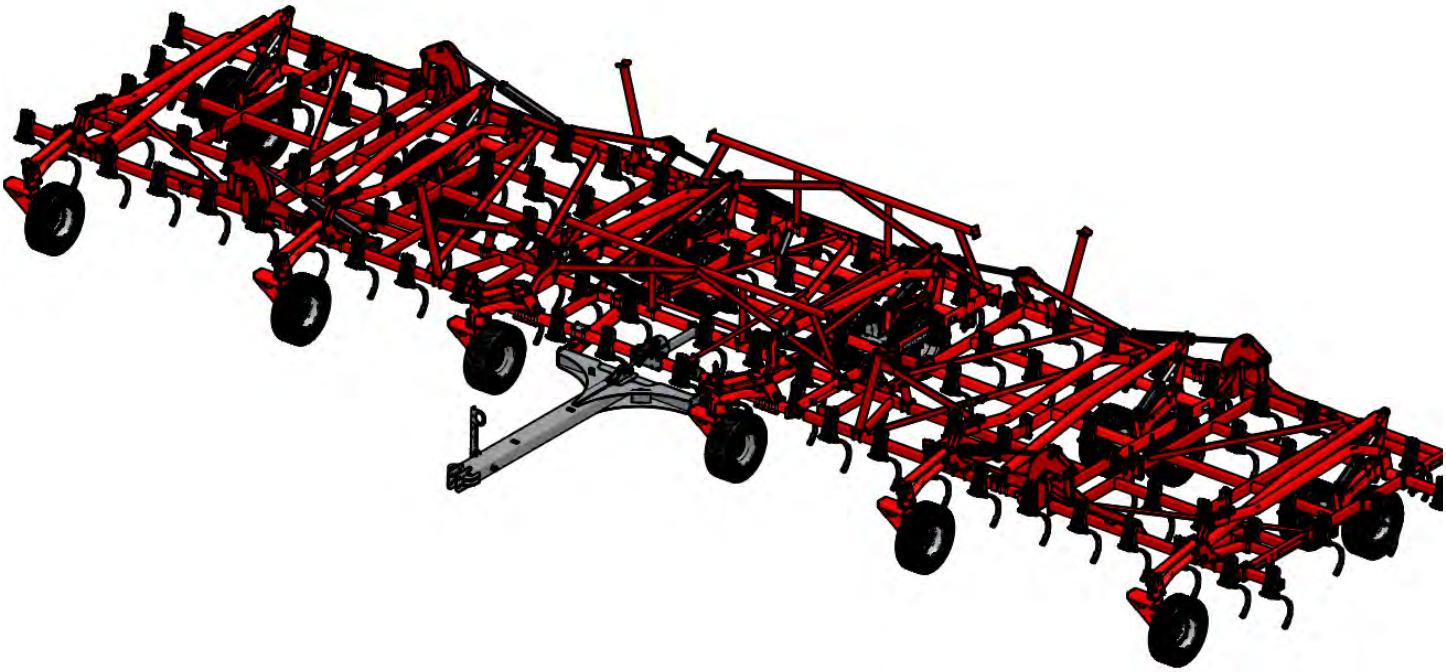

VÄDERSTAD

Introduction

Safety Alert Symbol

This is the safety alert symbol. The safety alert symbol will direct the operator's attention to information that involves personal safety and the safety of others.

Safety Messages

The words DANGER, WARNING, or CAUTION are used with the safety alert symbol. Learn to recognize these safety alerts and follow the recommended precautions and safety practices.

DANGER **Indicates an imminently hazardous situation that, if avoided, will result in DEATH OR VERY SERIOUS INJURY.**

WARNING **Indicates a potentially hazardous situation that, if not avoided, could result in DEATH OR SERIOUS INJURY.**

CAUTION **Indicates a potentially hazardous situation that, if not avoided, may result in MINOR INJURY.**

Informational Messages

The words important or note are not related to personal safety, but are used to give additional information and tips for operating or servicing this equipment.

IMPORTANT: Identifies special instructions or procedures which, if not strictly observed, could result in damage to or destruction of the machine, process, or its surroundings.

NOTE: Identifies points of particular interest for more efficient and convenient repair or operation.

Safety Signs

WARNING **Do not remove or obscure Danger, Warning, or Caution signs. Replace any Danger, Warning or Caution signs that are not readable or are missing. Replacement signs are available from the dealer in the event of loss or damage. The actual location of the safety signs is illustrated at the end of this section.**

Keep signs clean by wiping off regularly. Use a cleaning solution if necessary.

If parts have been replaced or a used machine has been purchased, make sure all safety signs are in the correct location and can be read. Illustrations of safety sign locations are located at the rear of this section.

Replace any safety signs that can not be read or are missing. Clean the machine surface thoroughly with a cleaning solution before replacing signs. Replacement safety signs are available from a dealer.

Introduction (Cont'd)

A Word To The Operator

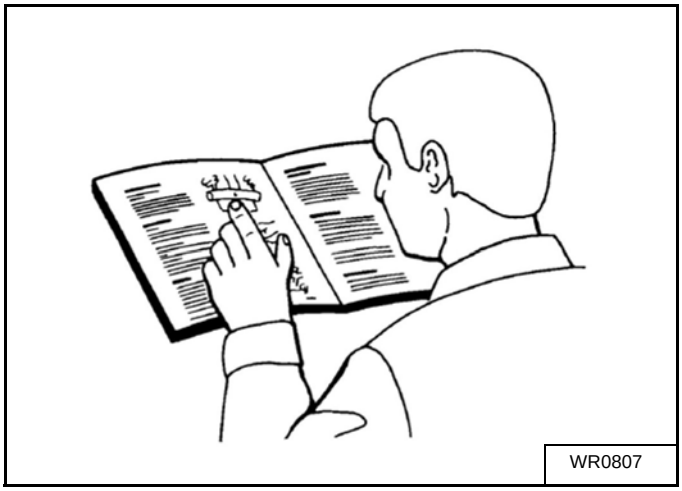

It is the operator's responsibility to read and understand the safety section in this manual and the manual for all attachments before operating this machine.

Study the features in this manual and make them a working part of a safety program. Keep in mind that this safety section is written only for this type of machine. Practice all other usual and customary safe working precaution. The operator can prevent serious injury and death.

This safety section is intended to point out some of the basic safety situations that may be encountered during the normal operation and maintenance of this machine. This section also suggests possible ways of dealing with these situations. This section is not a replacement for other safety practices feature in other sections of this manual.

Personal injury or death may result if these precautions are not followed.

Learn how to operate the machine and how to use the controls properly.

Do not let anyone operate the machine without instruction and training.

For personal safety and the safety of others, follow all safety precautions and instructions found in the manual and on safety signs affixed to the machine and all attachments.

Use only approved attachments and equipment

Make sure the machine has the correct equipment needed by the local regulations.

WARNING **An operator should not use alcohol or drugs which can affect their alertness or coordination. An operator on prescription or 'over the counter' drugs needs medical advice on whether or not they can properly operate machines.**

CAUTION **If any attachments used on this equipment have a separate Operator Manual, see that manual for other important safety information.**

Introduction (Cont'd)

This Manual

Right-hand and left-hand, as used in this manual, are determined by facing the direction the machine will travel when in use.

The photos, illustrations, and data used in this manual were current at the time of printing, but due to the possible in-line production changes, your machine can vary slightly in detail. The manufacturer reserves the right to redesign and change the machine as necessary without modification.

WARNING **In some illustrations and photos used in this manual, shields or guards may have been removed for clarity. Never operate the machine with any shields or guards removed. If the removal of shields or guards is necessary to make a repair, they must be replaced before operation.**

Operation

Prepare For Operation

Read and understand all operating instructions and precautions in this manual before operating or servicing the machine.

Know and understand the positions and operations of all controls. Make certain all controls are in neutral and the parking brake is applied before starting the machine. Make sure the steering wheel is centered and locked.

WARNING **Any time the engine is running and the parking brake is disengaged, the machine will turn if the steering wheel is moved even though the travel control lever is in neutral.**

Make certain all people are well away from the area of work before starting and operating the machine. Check and learn all controls in an area clear of people and obstacles before starting work. Be aware of the machine size and have enough space available to allow for operation. Never operate the machine at high speeds in crowded places.

Emphasize the importance of using correct procedures when working around and operating the machine. Do not let children or unqualified persons operate the machine. Keep others, especially children, away for the area of work. Do not permit others to ride on the machine.

Make sure the machine is in the proper operating condition as stated in the Operator's Manual. Make sure the machine has the correct equipment required by local regulations.

All equipment has a limit. Understand the speed, brakes, steering, stability and load characteristics of the equipment before starting.

Operation (Cont'd)

Personal Protective Equipment

Wear all personal protective equipment (PPE) and protective clothing issued or called for by job conditions and county / local regulations. PPE includes, but is not limited to, equipment to protect eyes, lungs, ears, head, hands and feet when operating, servicing or repairing equipment.

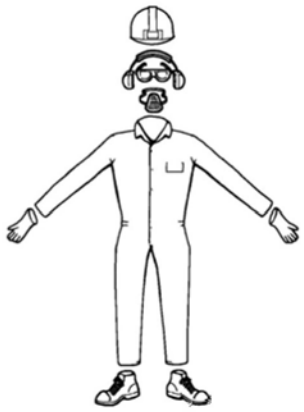

WR0808

Agricultural Chemicals

Agricultural chemicals can be very hazardous. Improper use of fertilizer, fungicides, herbicides, insecticides and pesticides can injure people, plants, animals, soil and other people's property.

Always read and follow all manufacturers' instructions before opening any chemical container.

Read and follow instructions each time a chemical is used.

Use the same precautions when adjusting, servicing, cleaning or storing the machine as used when installing chemicals into the hoppers or tanks.

Inform anyone who comes in contact with chemicals of the potential hazards involved and the safety precautions required.

Stand upwind and away from smoke from a chemical fire.

Store or dispose of all unused chemicals only in a manner as specified by the chemical manufacturer.

Operation (Cont'd)

Traveling On Public Roads

WARNING

Machine was designed for apply chemicals and fertilizers in off-road use. Do not use the machine for transporting product on public roads. Chemical spills result in environmental damage. A loaded machine driven on public roads also runs a high risk of tire failure. Personal injury could result.

Always walk around and visually inspect the machine before traveling on public roads. As a warning, honk the horn twice before starting the engine. Check for damage and / or faulty components that can fail and create a hazardous condition. Make sure all the machine systems operate properly. The following, including, but not limited to: front road lights, tail and brake lights, hazard warning lights, parking brake, horn, windshield wiper and washer and rear view mirrors. Repair or replace any component not in proper working order.

Never drive at a speed causing the machine to bounce or lose control.

Obey all traffic rules. Operate the machine with hazard warning lights on, unless prohibited by law. Use of road lights while traveling on public roads is operator's responsibility.

Maintenance

Fire Prevention And First Aid

Be prepared for emergencies.

Keep a first aid kit handy for treatment of minor cuts and scratches.

Always carry one or more fire extinguishers of the correct type. Check fire extinguishers regularly as instructed by the manufacturer. Make sure the fire extinguishers are properly charged and in operating condition.

Due to the nature of the crops this machine will operate in, the risk of fire is of concern. Use a water type fire extinguisher or other water source for a fire in crops.

For fires involving anything other than crops, such as oil or electrical components, use a dry chemical fire extinguisher with a ABC rating.

Mount fire extinguishers within easy reach of where fires can occur.

Frequently remove accumulated crop material from the machine and check for overheated components. Check the machine daily for any noises that are not normal. Such noises could indicate a failed component that can cause excess heat.

If any flame cutting, welding, or arc welding is to be done on the machine or attachments, make sure to clear any crop material or debris from around the area. Make sure the area below the work area is clear of any flammable material as falling molten metal or sparks can ignite the material.

If fire occurs stand upwind and away from the smoke from the fire.

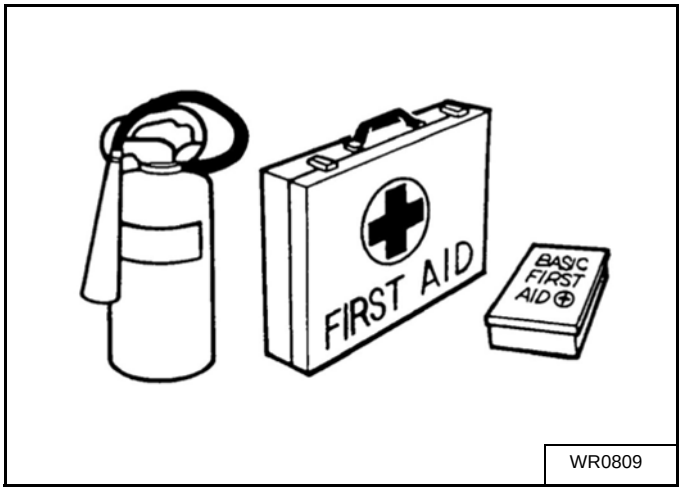

WR0809

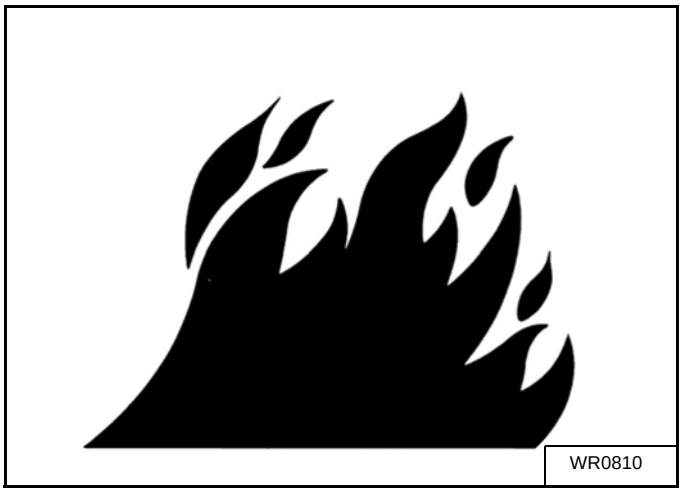
WR0810

Maintenance (Cont'd)

High Pressure Leaks

Fluid leaking from the hydraulic system or the fuel injection system under high pressure can be very hard to see. The fluid can go into the skin causing serious injury.

Fluid injected into the skin must be surgically removed within a few hours. If not removed immediately, serious infection or reaction can develop. Go immediately to a doctor who knows about this type of injury.

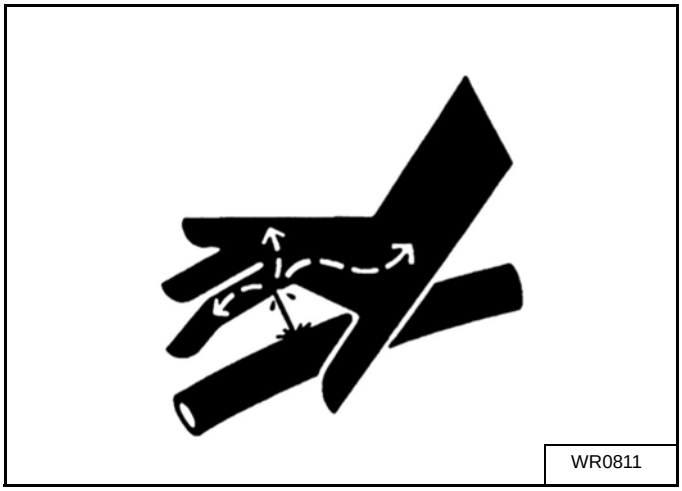

Use a piece of cardboard or wood to search for possible leaks. Do not use your bare hand. Wear leather gloves for hand protection and safety goggles for eye protection.

Relieve all pressure before loosening any hydraulic lines. Relieve the pressure by lowering raised equipment, shutting off accumulator valve, if equipped, and shutting off the engine. Tighten all connections securely before apply pressure.

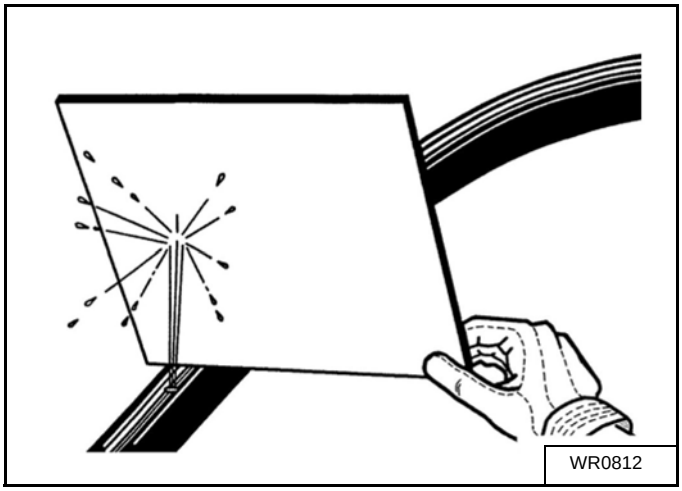

Maintenance (Cont'd)

Tire Safety

Check the tires for cuts, bulges and the correct pressure. Replace worn or damaged tires. When tire service is needed, have a qualified tire mechanic service the tire. Changing the tire can be very hazardous and must be done by a qualified tire mechanic using the proper tools and equipment. See the Specifications Sections for the correct tire size.

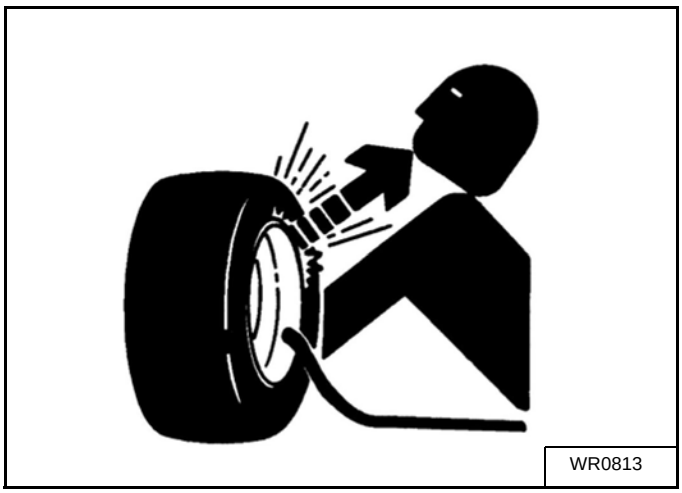

Tire explosion and / or serious injury can result from over inflation. Do not exceed the tire inflation pressures. See the Specifications Section for the correct tire pressure.

Do not inflate a tire that is seriously under inflated or has been run flat. Have the tire checked by a qualified tire mechanic.

Do not weld on the rim when a tire is installed. Welding can make an air / gas mixture that can cause an explosion and burn with high temperatures. This danger applies to all tires, inflated or deflated. Removing air or breaking the bead is not enough. The tire must be completely removed from the rim prior to welding.

When preparing a calcium chloride solution for fluid ballasting the tractor tires, never pour water onto the calcium chloride. A chlorine gas can be generated which is poisonous and explosive. This can be avoided by slowly adding calcium chloride flakes to water and stirring until they are dissolved.

When seating tire beads onto the rims, never exceed 2.4 bars (35 psi) or the maximum inflation pressure specified on the tire. Inflation beyond this maximum pressure may break the bead, or even the rim, with explosive force.

Maintenance (Cont'd)

Replacement Parts

Where replacement parts are necessary for periodic maintenance and servicing, genuine replacement parts must be used to restore your equipment to original specifications.

The manufacturer will not accept responsibility for installation of unapproved parts and / or accessories and damages as a result of their usage.

WR0814

Torque Specifications

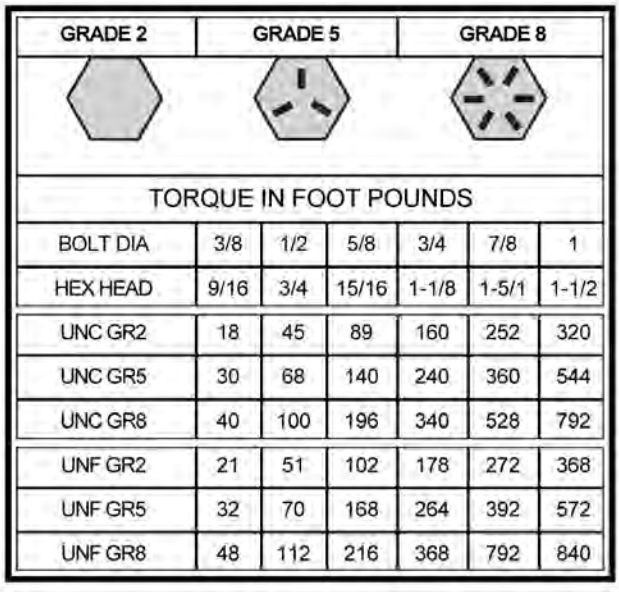

GRADE 2	GRADE 5	GRADE 8

TORQUE IN FOOT POUNDS

BOLT DIA	3/8	1/2	5/8	3/4	7/8	1
HEX HEAD	9/16	3/4	15/16	1-1/8	1-5/1	1-1/2
UNC GR2	18	45	89	160	252	320
UNC GR5	30	68	140	240	360	544
UNC GR8	40	100	196	340	528	792
UNF GR2	21	51	102	178	272	368
UNF GR5	32	70	168	264	392	572
UNF GR8	48	112	216	368	792	840

WR0513

Wheel Nut and Bolt Torque

Nut Size	Grade	Torque
1/2" -20UNF x 60°	5	93 ft/lbs
1/2" -20UNF X 60°	5	93 ft/lbs
1/2" -20UNF X 90°	5	93 ft/lbs
9/16" -18UNF X 90°	5	133 ft/lbs
5/8" -18UNF X 90°	5	187 ft/lbs
5/8" -18UNF X 90° (Heavy Hex)	5	187 ft/lbs
3/4" -16UNF (Bud Nut)	8	462 ft/lbs
3/4" -16UNF (Flange Nut)	8	462 ft/lbs
7/8" -14UNF (Flange Nut)	8	735 ft/lbs
Bolt Size	**Grade**	**Torque**
1/2"-20UNF X 1-7/16"	5	72 ft/lbs
1/2"-20UNF X 1-1/4"	5	72 ft/lbs
1/2"-20UNF X 1-1/2"	5	72 ft/lbs
1/2"-20UNF X 1-3/4"	5	72 ft/lbs
1/2"-20UNF X 1"	5	72 ft/lbs
9/16"-18UNF X 1-3/4"	5	103 ft/lbs
9/16"-18UNF X 2-1/4"	5	103 ft/lbs

WR0815

Marker Lamps

The machine is equipped with marker lamps that must be used when transporting the machine on public roads.

The machine is equipped with two amber lamps (1) (4) located on the outside edges of the rear wing rest frame.

The machine is equipped with two red lamps (2) (3) located in the rear center of the machine.

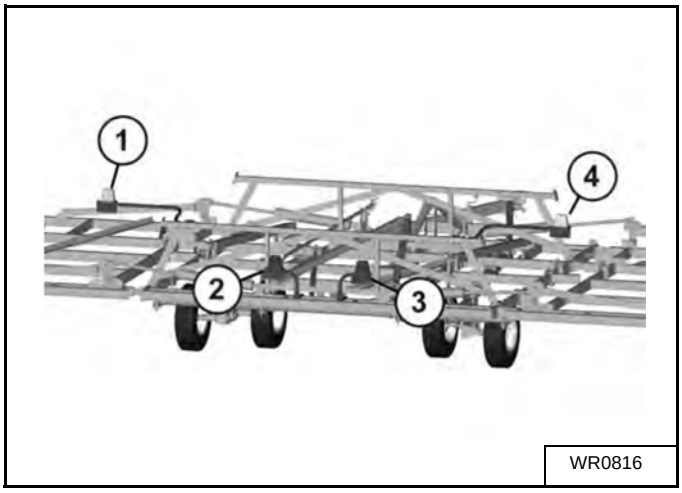

Transport Stops

The machine is equipped with transport stops (1). Use the transport stops when transporting the machine on public roads. When not in use, keep the transport stops on the storage brackets (2) on the main frame of the machine.

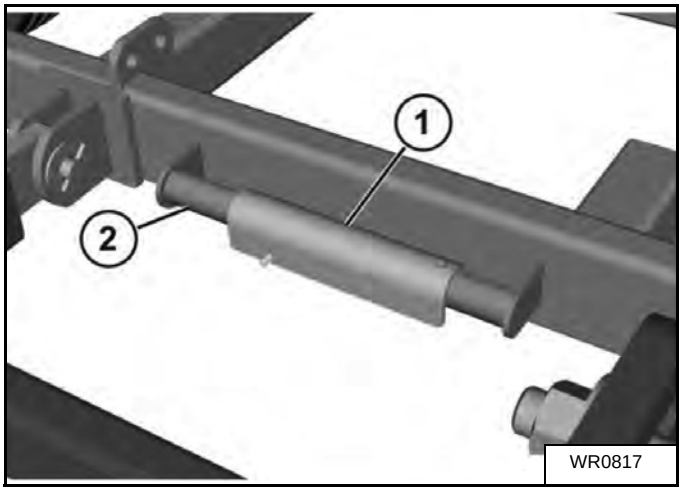

Install the transport stops (1) on the rods of the lift cylinders (2) located at the rear of the machine.

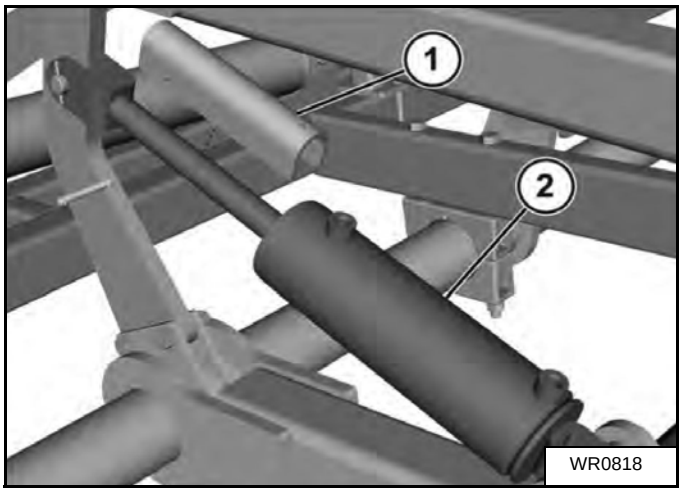

Unbundling

Installing tires at this point is optional.

STEP 1

While frame is still in shipping configuration, remove the straps to allow access to the hubs.

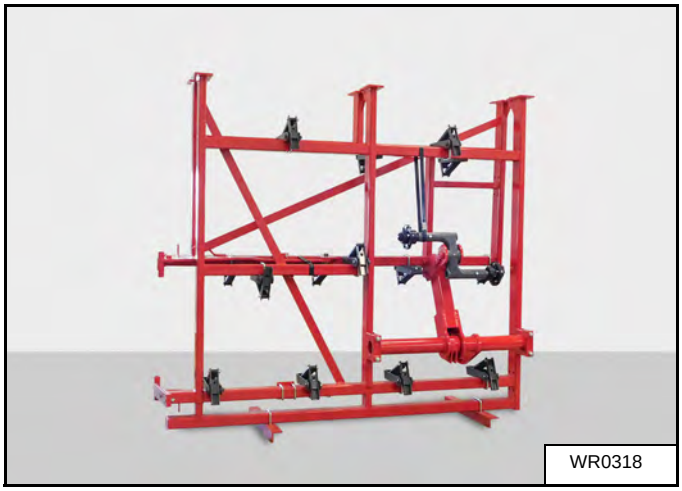

STEP 2

Place the tire on the hub using six lug bolts.

Tighten the lug bolts in a star pattern to the torque specs.

103 ft-lbs (140 N•m) for the 8 bolt main frame wheels.

72 ft-lbs (98 N•m) for all other 6 bolt wheels.

NOTE: Tires on the main frame and wings are all installed the same way.

The tires on the main frame use 63831 9/16 inch NF lug bolts. The tires on the wings use 88142 1/2 inch NF lug bolts.

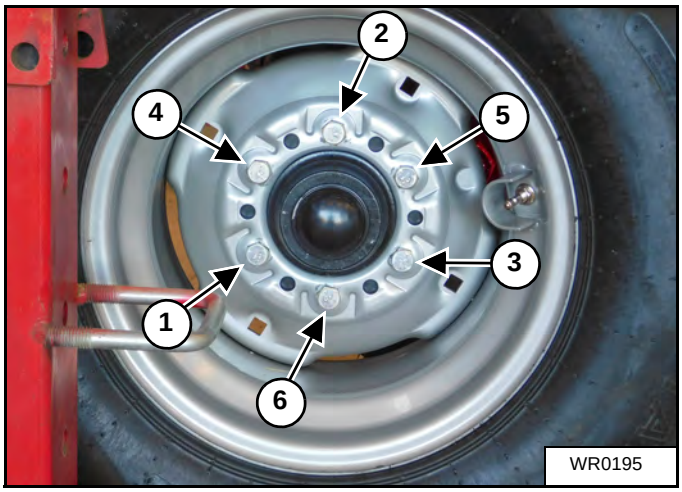

Unbundling (Cont'd)

Opening Bundle

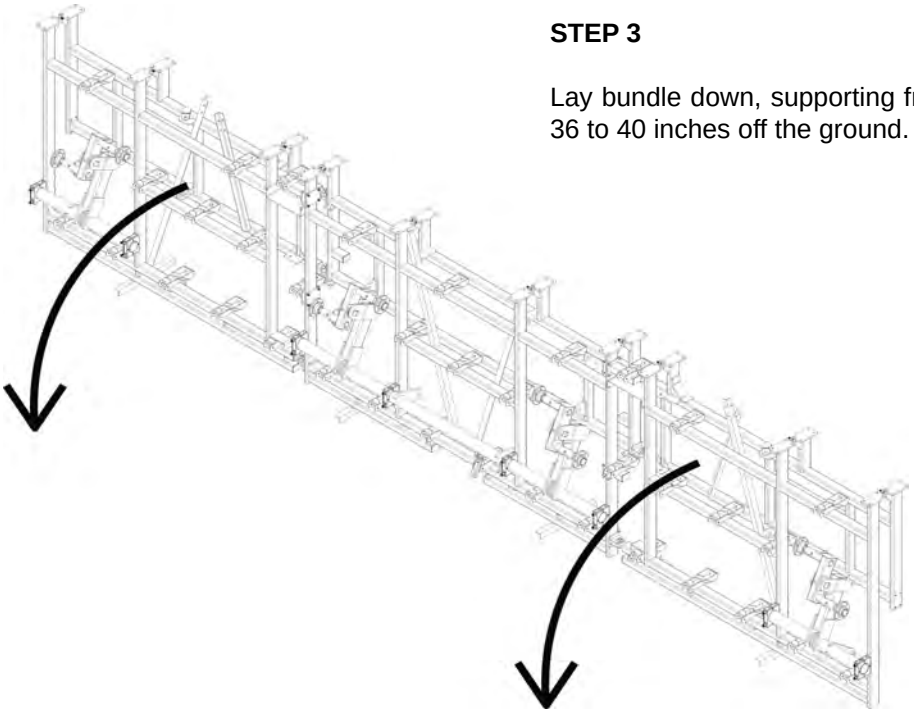

STEP 3

Lay bundle down, supporting frame securely 36 to 40 inches off the ground.

WR0508

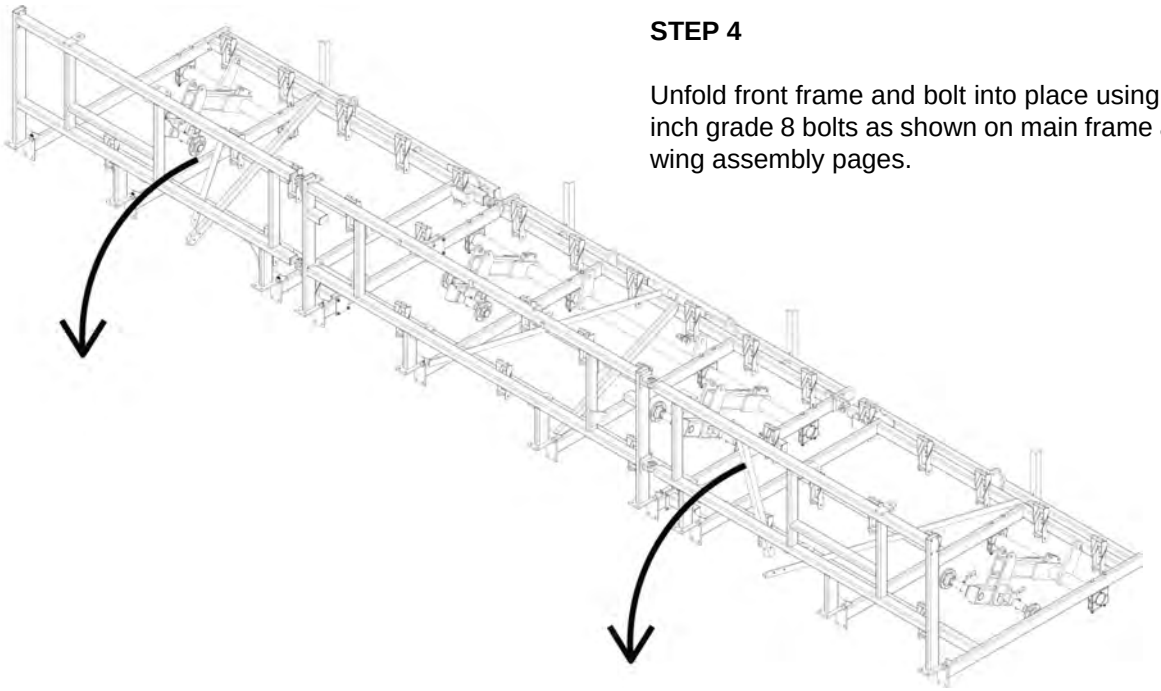

STEP 4

Unfold front frame and bolt into place using 3/4 inch grade 8 bolts as shown on main frame and wing assembly pages.

WR0507

Unbundling (Cont'd)

Opening Bundle (Cont'd)

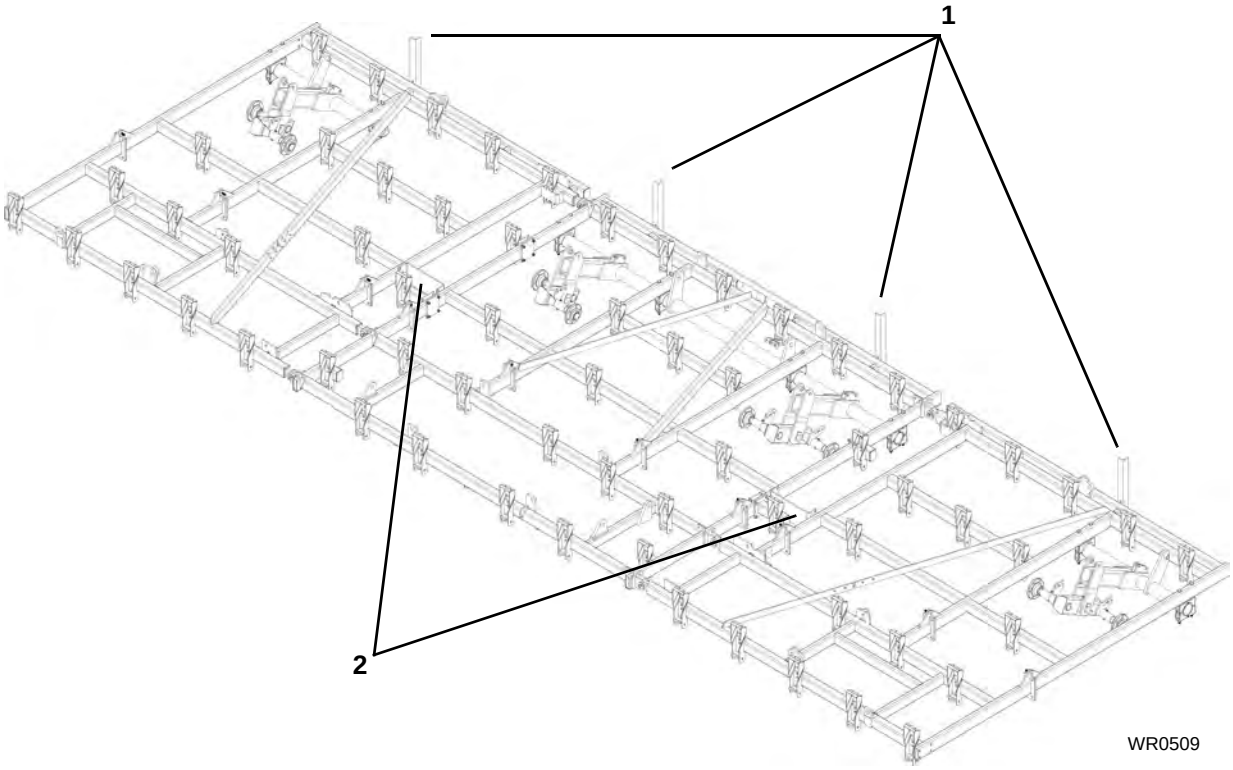

STEP 5

After bundle is unfolded and two frame halves are bolted together remove shipping stands (1) and brackets (2).

After the shipping stands (1) and brackets (2) are removed the rest of the cultivator may be assembled as shown in this book.

Lay the frame carefully down on the stands 24 1/2 inches (62 cm) off the ground.

NOTE: 24 1/2 inches only if the tires were installed in Steps 1, 2 and 3. If not installed the height will be 30 - 40 inches (76 - 102 cm) to allow clearance to install the tires after the frame is resting on the stands.

Unbundling (Cont'd)

STEP 6

Cut the bands holding the front part of frame in place.

Loosen up the pivot bolts (1) for the front section of the main frame.

Unfold the front part of the frame.

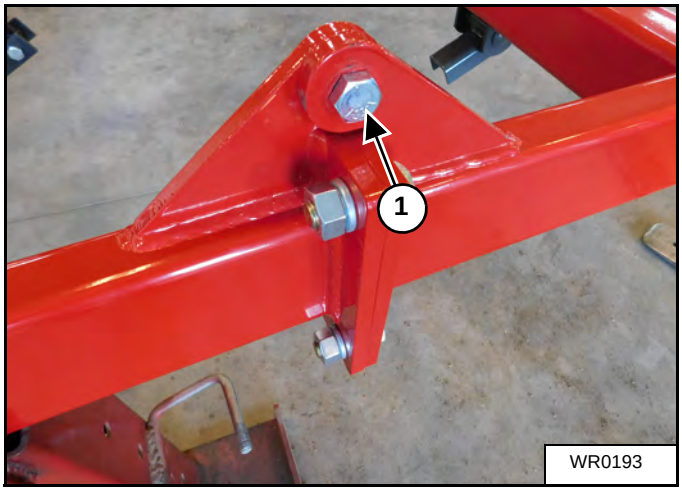

STEP 7

Align the flanges (1) on the front section of the frame and main frame.

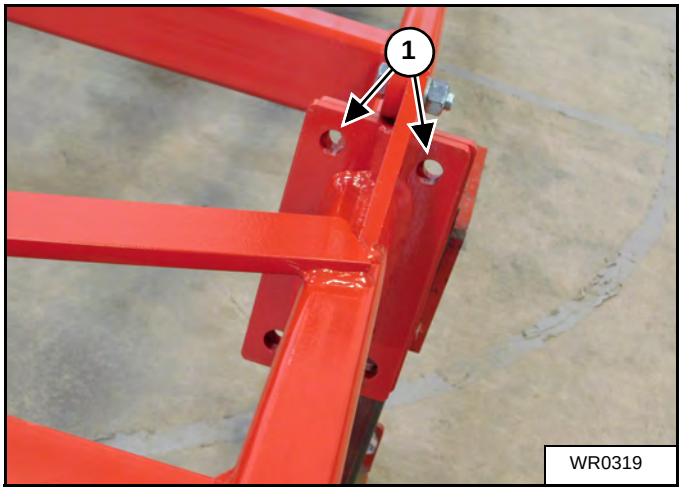

STEP 8

Use four 88290 3/4 x 2 inch grade 8 bolts (1), 88584 and 88110 nuts to secure the frame flanges making sure to align bolts front to back.

Use Steps 5 and 6 for all hinge flanges.

Tighten up the pivot bolts (2) that were loosened in Step 4.

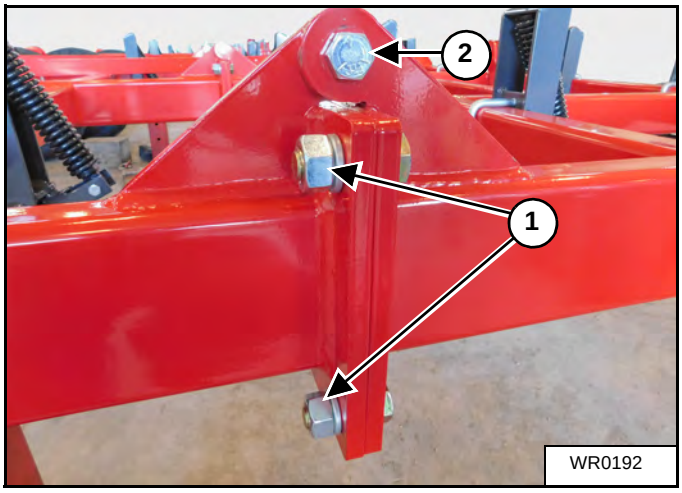

5 SECTION CULTIVATOR

Shank Assembly

Twin Spring Shank Assembly

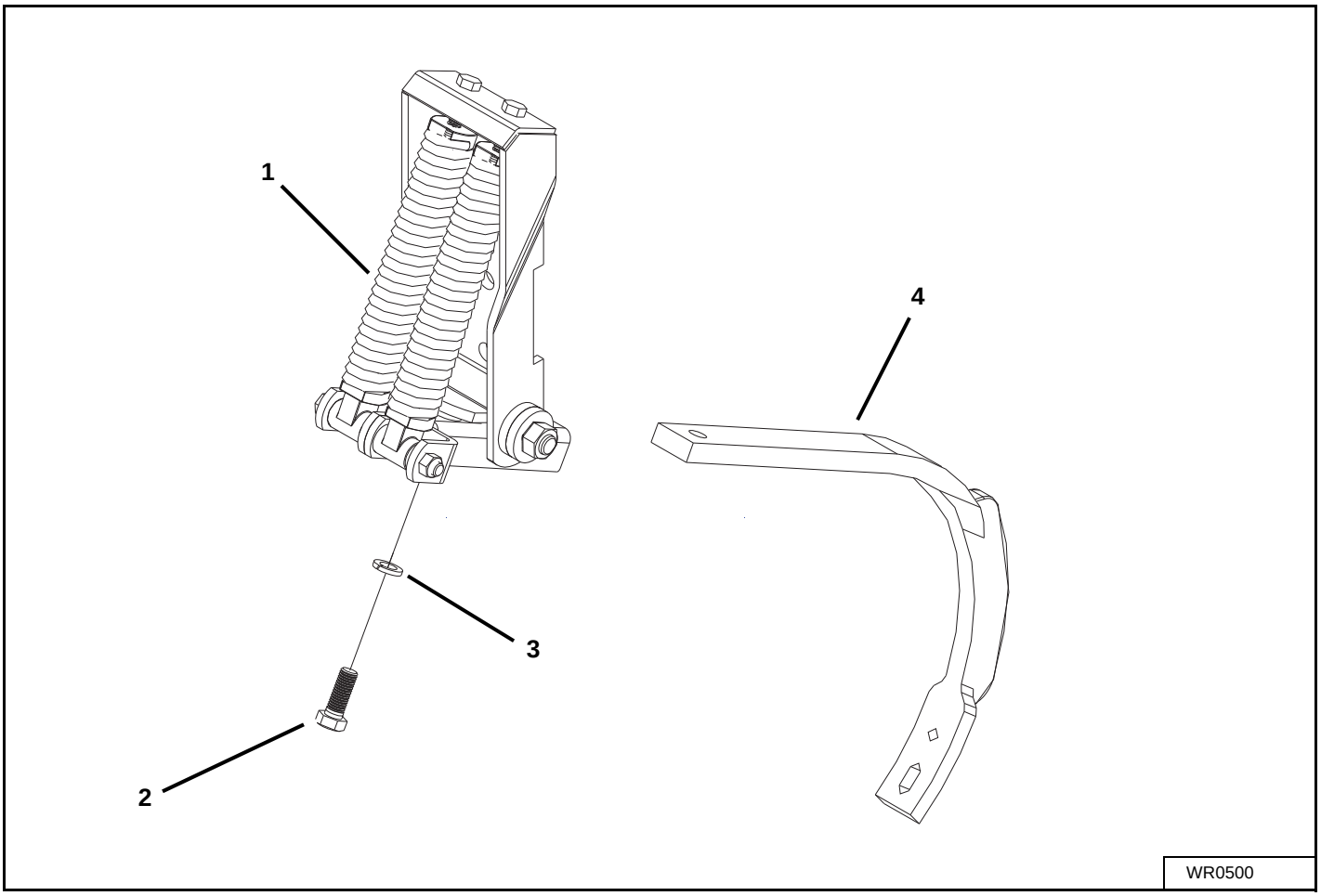

REF.	PART NO.	DESCRIPTION
1	240560	TWIN SPRING FC SHK HOLDER ASSY
2	88838	BOLT, HEX: 5/8 - 11NC x 1-3/4 5ZP
3	88129	WASHER, Lock Helical: 5/8 ID (11/16 ACT) ZP
4	55655	HD EDGE FORM CULT SHNK (GRAY)

Shank Assembly (Cont'd)

Single Spring Shank Assembly

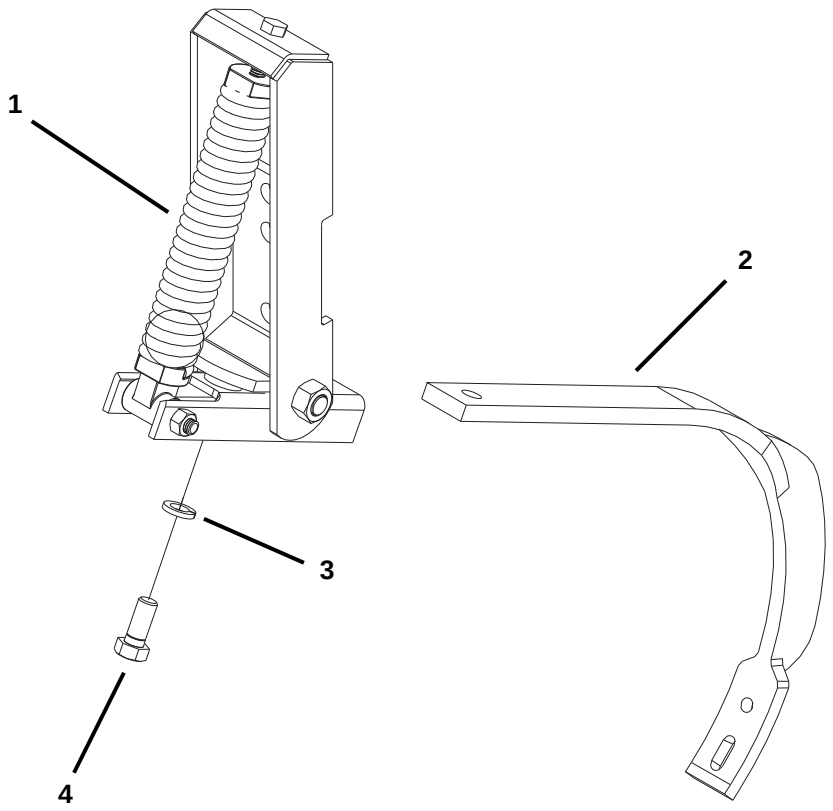

WR0501

REF.	PART NO.	DESCRIPTION
1	240434	SINGLE SPRING SHK HOLDER ASSY
2	53408	EDGE FORMED SHANK (GRAY)
3	88129	WASHER, Lock Helical: 5/8 ID (11/16 ACT) ZP
4	88577	BOLT, Hex: 5/8 - 11NC x 1-1/2 5ZP

Shank Assembly (Cont'd)

STEP 9

Some spring assemblies were installed backwards (1) for shipping. Remove the backwards spring assemblies and using the existing hardware reinstall them in the same location facing forward.

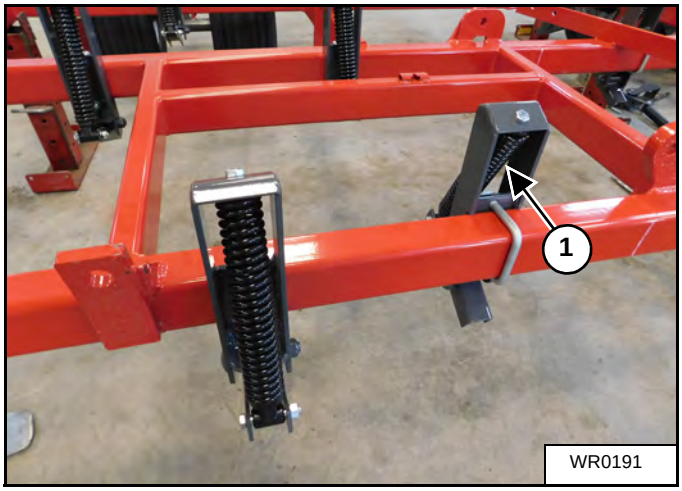

QX² & XL² SIZES 11’ & 13’ T/L HITCH A-FRAME 13’ LL

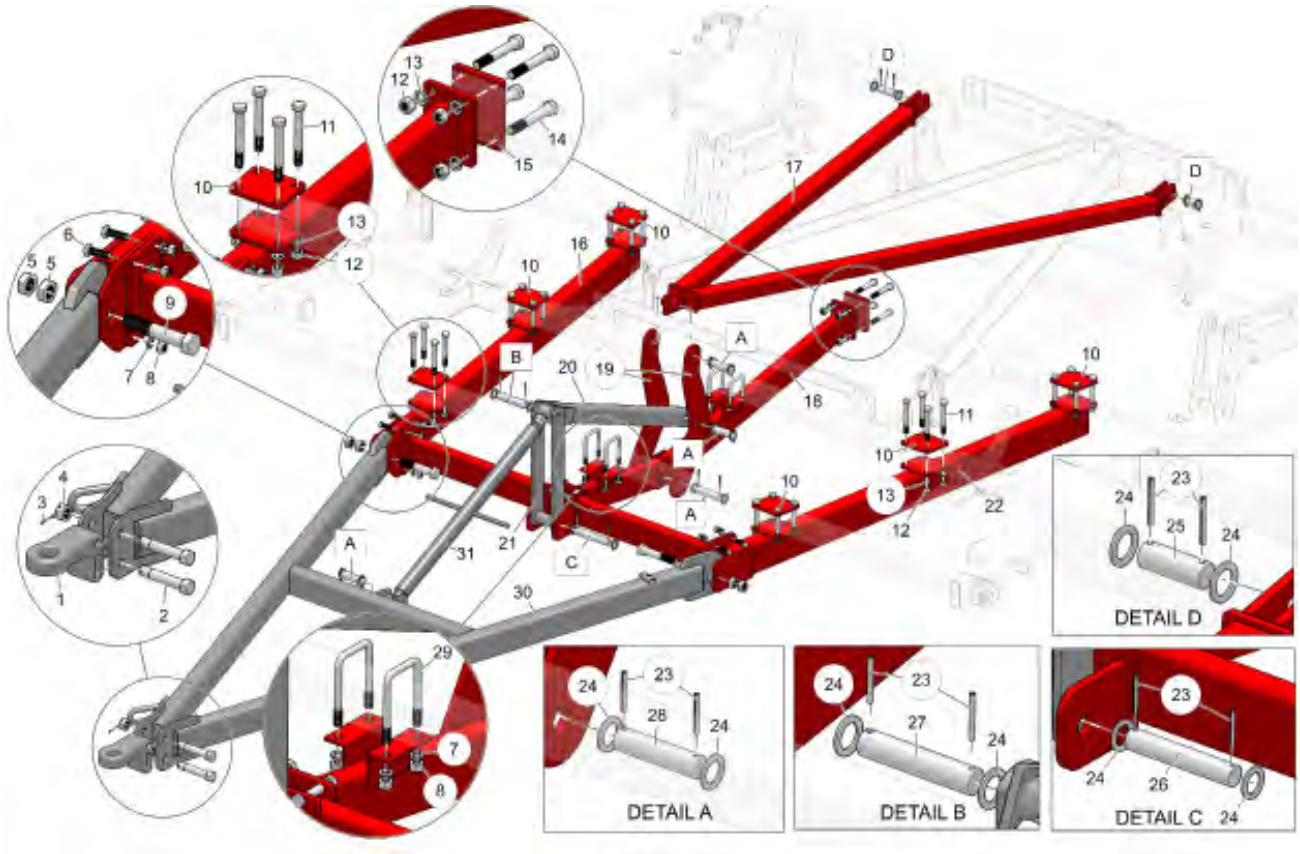

QX² & XL² SIZES 11' & 13' T/L HITCH A-FRAME 13' LL

ITEM	PART #	QTY	DESCRIPTION	ITEM	PART #	QTY	DESCRIPTION
1	42824	1	CAST DUAL HITCH	17	P67743	1	13EXC CENTER LIFT TUBE BRACKET
2	P11638	2	BOLT, HITCH SPECIAL 1-1/4 X 6-1/2	18	P220785	1	CENTER FRAME HITCH ATTACHMENT
3	P88133	2	PIN-COTTER: 3/16 DIA X 2 ZP	19	P67933	2	PLATE (3-HOLE) 5-SECT
4	P88350	2	NUT-CASTLE: 1-1/4-7NC 2ZP	20	P67906	1	LINKAGE
5	P88622	4	NUT JAM 1-1/4-7NC 5Z	21	P67937	1	CENTER HITCH BRACKET
6	P88294	8	BOLT-HEX: 5/8-11NC X 2 5ZP	22	P220796	1	QX² & XL² HITCH TUBE-LEFT
7	P88129	16	WASHER-LOCK: HELICAL 5/8ID (11/16ACT) ZP	23	P42484	16	PIN-ROLL: 1/4 X 2-1/4 ZP
8	P88126	16	NUT-HEX: 5/8-11NC 5ZP	24	P88440	16	BUSHING-MACHINERY: 1-1/4 X 1-7/8 14GA ZP
9	P88349	2	BOLT-HEX: 1-1/4-7NC X 6-1/2 5ZP	25	P68034	2	HEADLESS PIN(2) 1-1/4X3.38
10	P68040	6	FLAT (RED) 11' & 13"	26	P68032	1	HEADLESS PIN(2) 1-1/4X7.25
11	P88293	24	BOLT-HEX: 3/4-10NC X 6 5ZP	27	P68030	1	HEADLESS PIN(2) 1-1/4X6.13
12	P88110	28	NUT-HEX: 3/4-10NC 5ZP	28	P68031	4	HEADLESS PIN(2) 1-1/4X5.12
13	P88130	28	WASHER-LOCK: HELICAL 3/4ID (13/16ACT) ZP	29	P88503	4	BLT-U 5/8-11NC X 3 X 5-1/4 Z
14	P88305	4	BOLT-HEX: 3/4-10NC X 5 5ZP	30	P233672	1	13 EXC MAIN FRAME HITCH
15	P68354	1	4 HOLE BOLT PLATE (3.5 X 4.75) RED	31	P68036	1	ADJUSTER ASSEMBLY
16	P220795	1	QX² & XL² HITCH TUBE-RIGHT				

NO MAIN FRAME TIRES USED

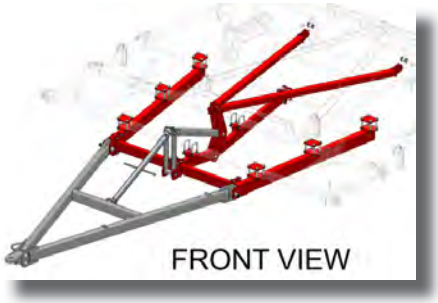

Please refer to Maintenance for torque

T/L HITCH T-STYLE FLOATING

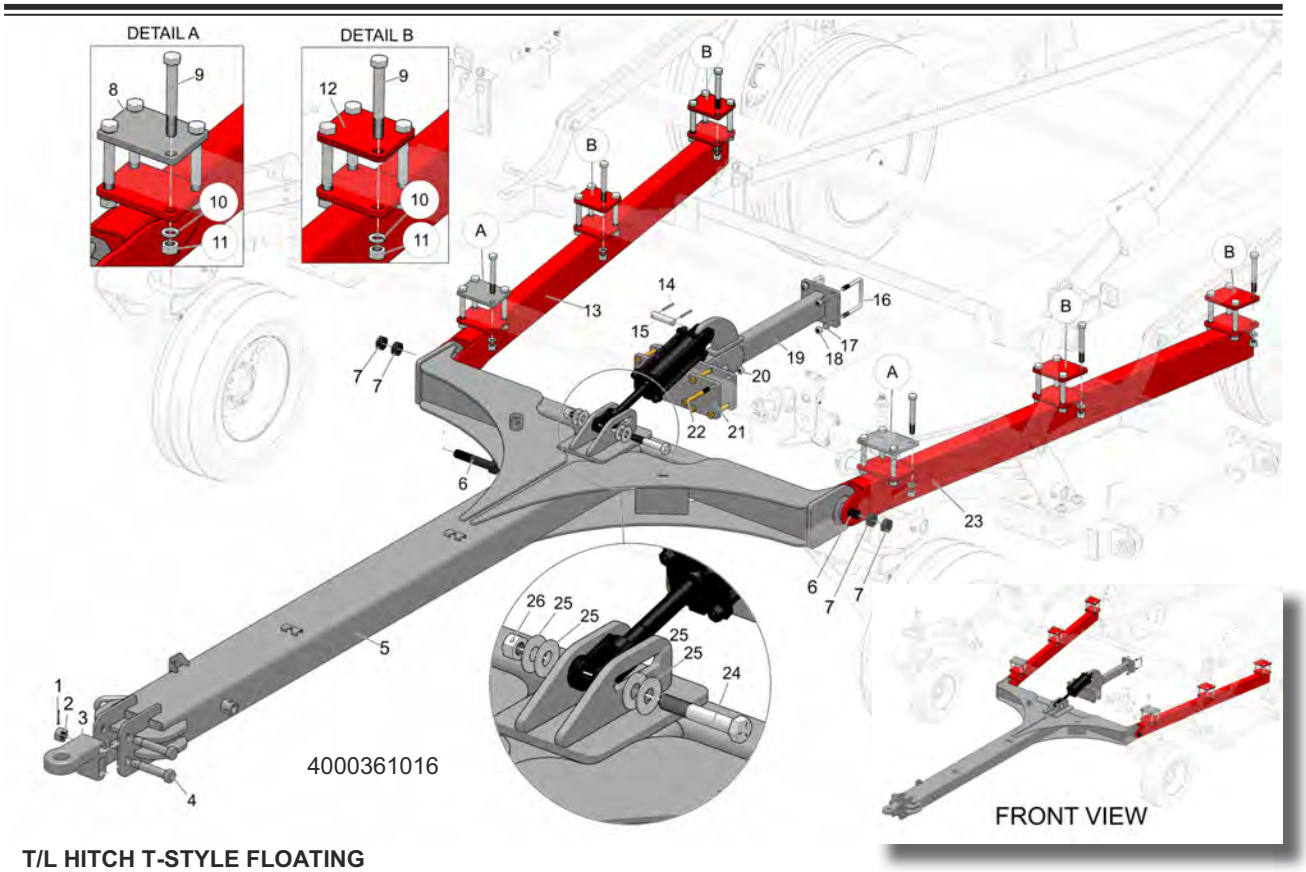

T/L HITCH T-STYLE FLOATING

ITEM	PART NUMBER	QTY	DESCRIPTION
1	P88133	2	PIN-COTTER: 3/16 DIA X 2 ZP
2	P88350	2	NUT-CASTLE: 1-1/4-7NC 2ZP
3	55920	1	CAST DUAL HITCH (18236)
4	P11638	2	BOLT, HITCH SPECIAL 1-1/4X6-1/2
5	334051	1	T-HITCH WELDMENT
6	P88349	2	BOLT-HEX: 1-1/4-7NC X 6-1/2 5ZP
7	P88622	4	NUT JAM 1-1/4-7NC 5Z
8	334677	2	WIDER HITCH PLATE - PAINTED
9	P88293	24	BOLT-HEX: 3/4-10NC X 6 5ZP
10	P88130	24	WAHSER-LOCK: HELICAL 3/4ID (13/16ACT) ZP
11	P88110	24	NUT-HEX: 3/4-10NC 5ZP
12	P68040	4	FLAT (RED) 11' & 13'
13	334643	1	HITCH TUBE WELDMENT RIGHT
14	P88767	2	PIN ROLL 1/4DIA X 2-1/2Z
15	P221714	1	HEADLESS PIN(2) 1X4.00
16	P88501	2	BLT-U 5/8-11NC X 4 X 4-1/4 Z
17	P88129	4	WASHER-LOCK: HELICAL 5/8ID (11/16ACT) ZP
18	P88126	4	NUT-HEX: 5/8-11NC 5ZP
19	334045	1	T-HITCH WEIGHT BALANCE BRACE WELDMENT
20	P88845	8	NUT TOP LK 5/8-11NC 5Z
21	334050	1	T-HITCH BRACE BACK PLATE
22	P89547	8	BOLT-HEX: 5/8-11NC X 5-1/2 8YZP
23	334646	1	HITCH TUBE WELDMENT LEFT
24	P88264	1	BOLT-HEX: 1-8NC X 6 5ZP
25	P88196	4	WASHER-FLAT: 1 (1/1/16 X 2-1/2ACT) 2ZP
26	P88348	1	NUT-LOCK: 2 POS 1-8NC 2ZP

QX² & XL² 13’ TL HITCH A-FRAME FLOATING

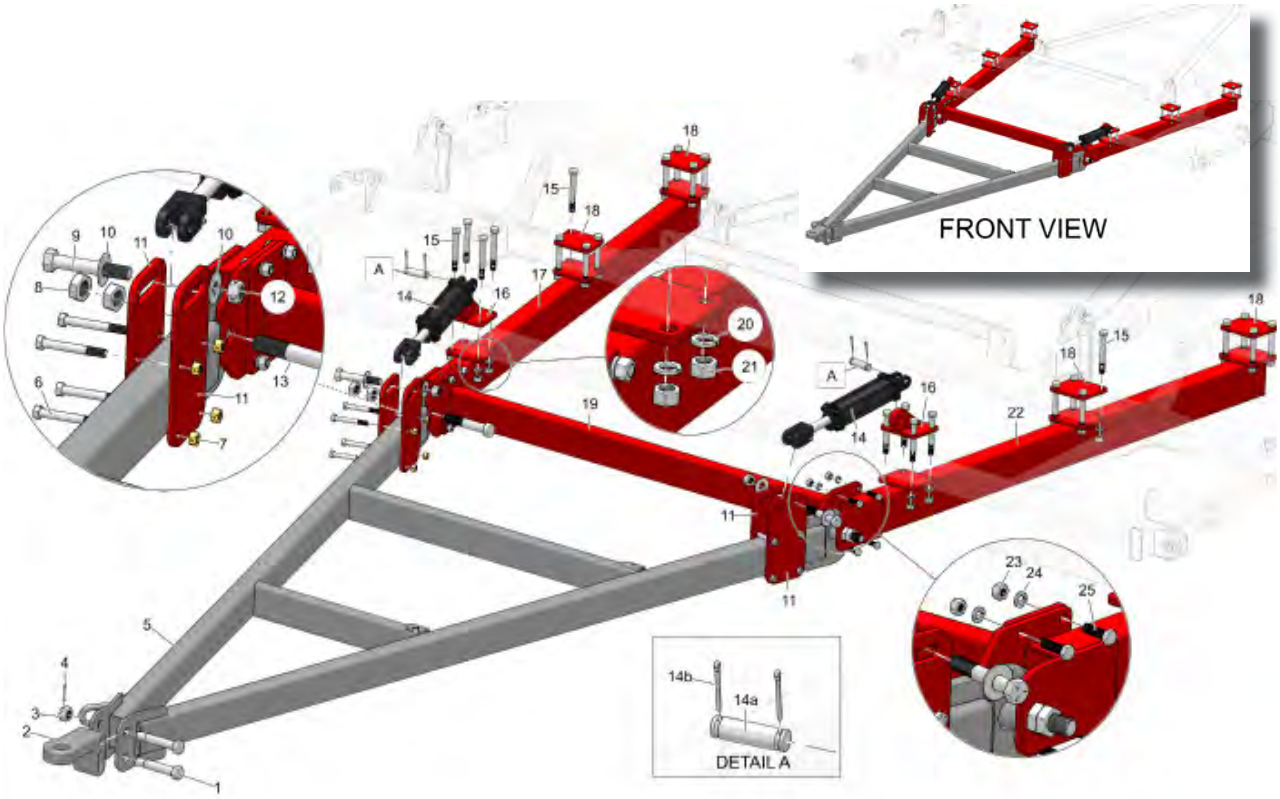

QX² & XL² 13' TL HITCH A-FRAME FLOATING

ITEM	PART #	QTY	DESCRIPTION
1	P11638	2	BOLT, HITCH SPECIAL 1-1/4X6-1/2
2	42824	1	CAST DUAL HITCH
3	P88350	2	NUT-CASTLE: 1-1/4-7NC 2ZP
4	P88133	2	PIN-COTTER: 3/16 DIA X 2ZP
5	P233670	1	13FT QUADX HITCH
6	P88395	8	BOLT-HEX: 5/8-11NC X 5 5ZP
7	P88369	8	NUT-LOCK: 2 POS 5/8-11NC 5YZP
8	P88622	4	NUT JAM 1-1/4-7NC 5Z
9	P88264	2	BOLT-HEX: 1-8NC X 6 5ZP
10	P88196	4	WASHER-FLAT: 1(1-1/16X2-1/2ACT) 2ZP
11	P247421	4	PLATE
12	P88348	4	NUT-LOCK: 2 POS 1-8NC 2ZP
13	P88349	2	BOLT-HEX: 1-1/4-7NC X 6-1/2 5ZP
14	P223324	2	HYD CY2-1/2X8 (SAE)
14a	190400001	1	HEADLESS PIN
14b	220001504	4	PIN-COTTER
15	P88293	24	BOLT-HEX: 3/4-10NC X 6 5ZP
16	P247417	2	ANCHOR WELD RH
17	P220795	1	QX² & XL² HITCH TUBE - RIGHT
18	P68040	4	FLAT (RED) 11' & 13'
19	P220792	1	13FT QX²/XL² HITCH TUBE
20	P88130	24	WASHER-LOCK: HELICAL 3/4ID (13/16ACT) ZP
21	P88110	24	NUT-HEX: 3/4-10NC 5ZP
22	P220796	1	QX² & XL² HITCH TUBE - LEFT
23	P88126	8	NUT-HEX: 5/8-11NC 5ZP
24	P88129	8	WASHER-LOCK: HELICAL 5/8ID (11/16ACT) ZP
25	P88294	8	BOLT-HEX: 5/8-11NC X 2 5ZP

Please refer to Maintenance for torque

Hitch Assembly (Cont'd)

STEP 10

Lift the hitch tube onto the main frame aligning the outside of the tab (1) on the bottom flange of the main frame.

NOTE: The left hitch tube is 220796. The right hitch tube is 220795.

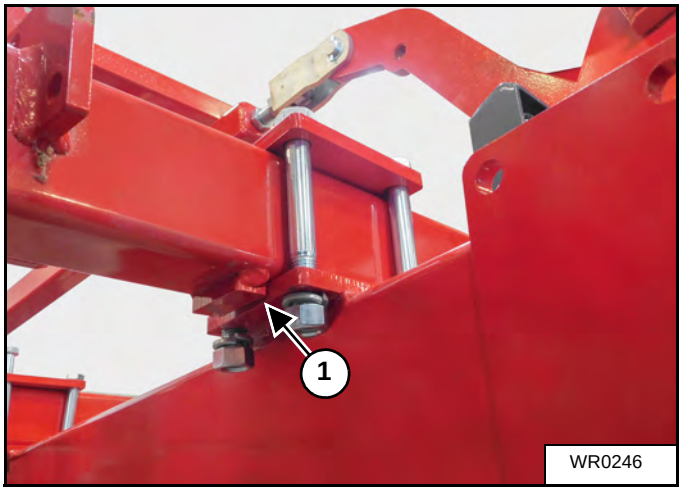

STEP 11

Using two 68040 plates (1) and the 247418 left side hitch cylinder plate (2) on top of the main frame along with twelve 88293 3/4 x 6 inch grade 5 bolts, 88130 lock washers and 88110 nuts secure the hitch bracket to the main frame. Leave the bolts loose until the crossmember has been installed.

Repeat Steps 9 and 10 for the other hitch bracket and use the 247417 right hitch cylinder plate.

NOTE: Right and left are determined as sitting in the tractor facing forward.

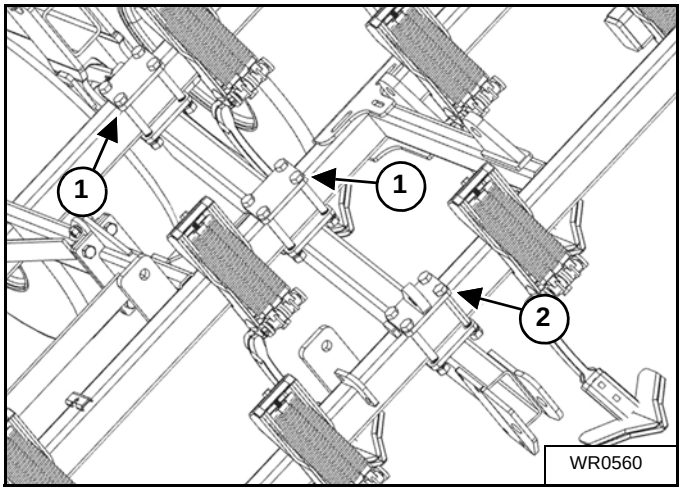

STEP 12 (A-Frame Hitch Only)

Use eight 88294 5/8 x 2 inch grade 5 bolts (1), 88129 lock washers and 88126 nuts to install the 220792 crossmember to the front of each hitch bracket.

Tighten the crossmember installed in Step 13 then tighten the bolts for both hitch brackets installed in Steps 11 and 12.

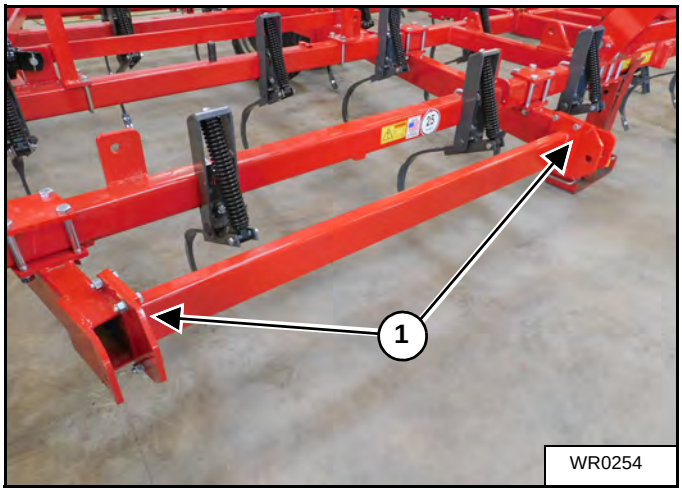

Hitch Assembly (Cont'd)

STEP 13

Place the 233670 hitch in front of the main frame. Be sure the decals (1) are facing up.

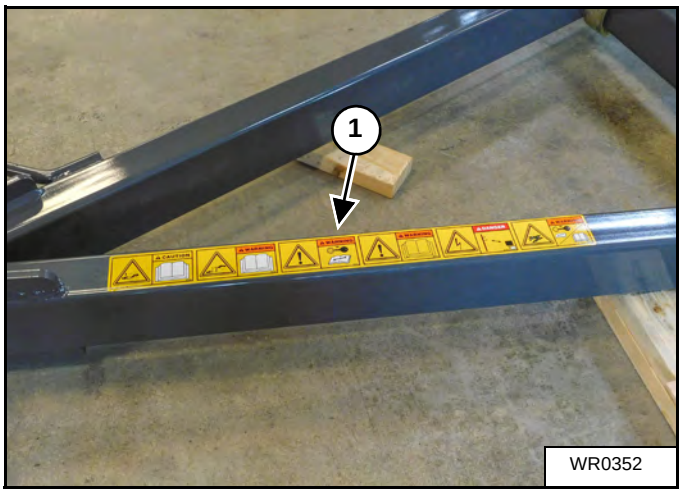

STEP 14 (A-Frame Hitch Only)

Use two 88349 1 x 1/4 x 6-1/2 grade 5 inch bolts (1) and two 88622 jam nuts per bolt to secure the hitch to the hitch brackets installed in Steps 8 and 9.

Tighten the inner nut (2) a half turn after contacting the bracket. Tighten the outer nut (3) firmly against the inner nut (2).

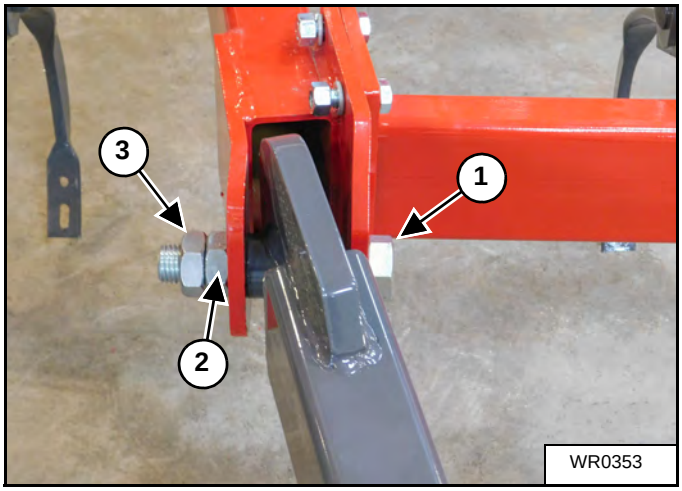

Hitch Assembly (Cont'd)

STEP 15

Install the 24415 jack to the hitch frame using the pin (1) chained to the hitch stand.

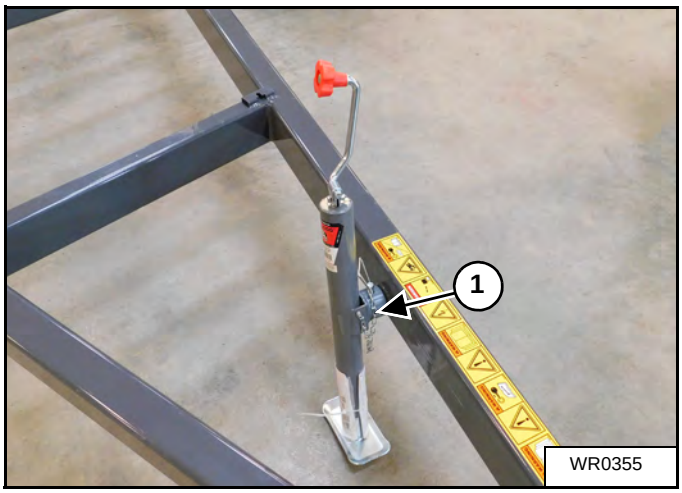

STEP 16

Use a 89358 3/8 x 6 x 3-3/4 inch U-bolt (1), 241777 backing plate (2), two 88282 flat washers, two 88362 lock washers (3) and two 88103 locknuts (4) to install the 236142 hose bracket as shown.

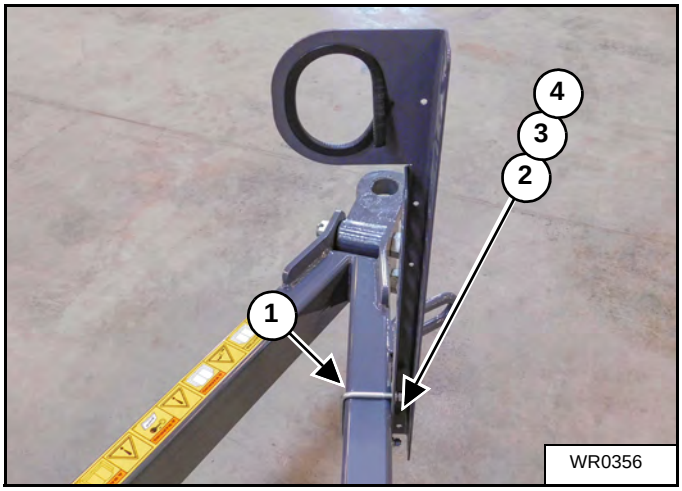

Hitch Assembly (Cont'd)

STEP 17

Install the 98231 weather stripping (1) in the opening of the hydraulic hose bracket. Cut off any overlapping edging (2).

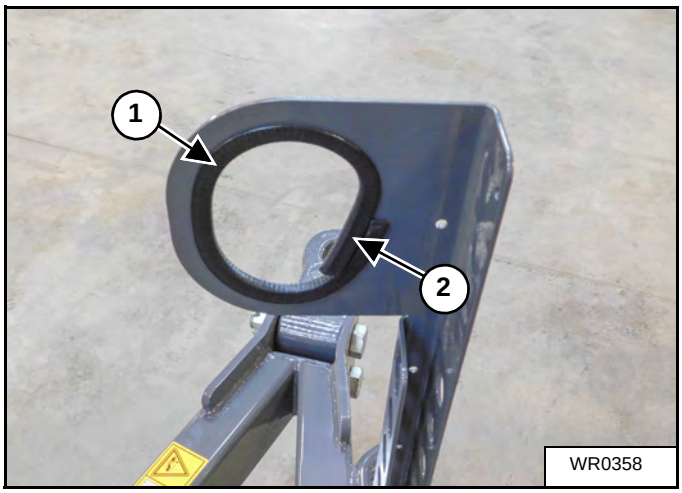

STEP 18

Install the 223329 light plug retainer to the 236142 hydraulic hose bracket with two 88203 1/4 x 1 inch grade 5 bolts (1), two 88261 flat washers (2), two 88262 lock washers (3) and two 88172 nuts (4).

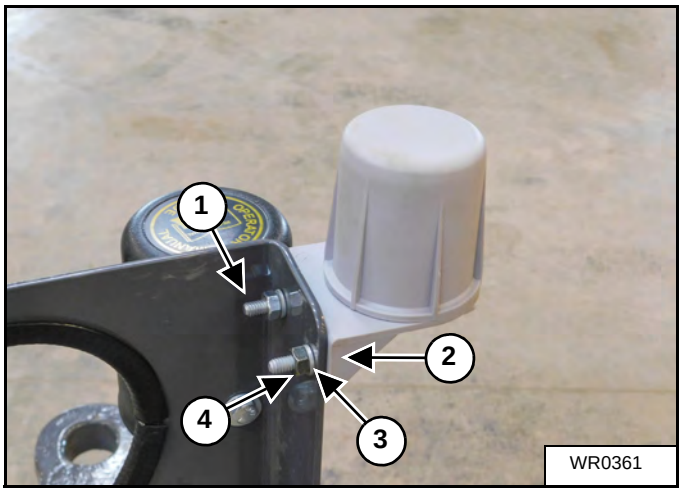

Hitch Assembly (Cont'd)

STEP 19

Install the 24459 safety chain to the hitch by running through the bracket (1) on the hitch frame then through the end (2) of the hitch safety chain as shown.

NOTE: The chain must be installed in the loop on the right side of the hitch.

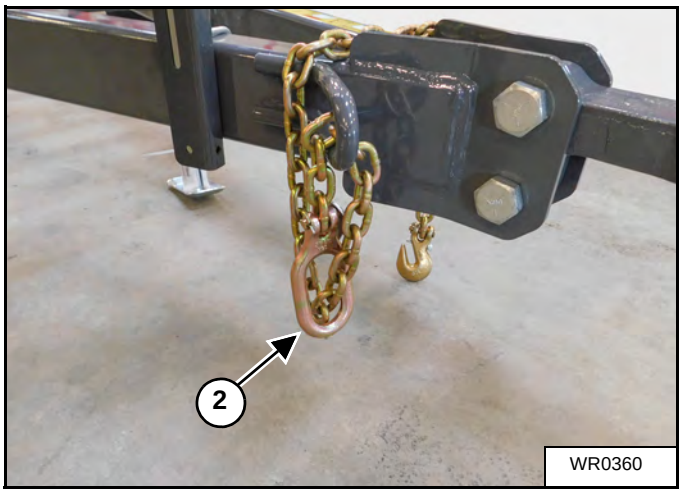

Wing Rest Assembly

STEP 20

The two wing rests (1) are shipped bolted together.
Remove the bolts that separate the rests (1).

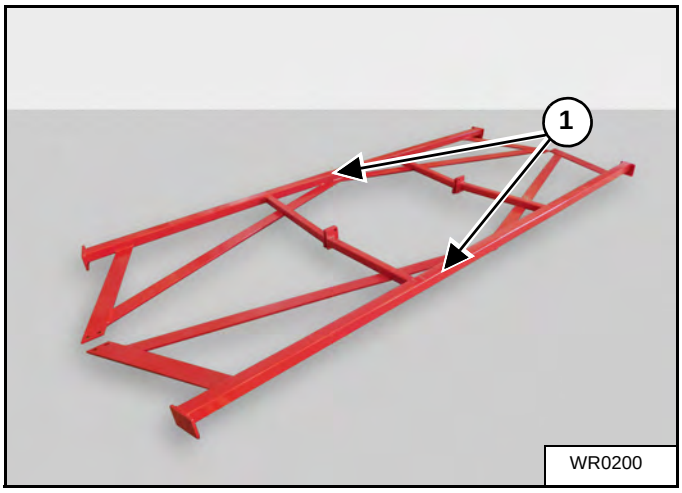

Wing Rest Assembly (Cont'd)

STEP 21

Using four 88290 3/4 x 2 inch grade 8 bolts (1), 88130 lock washers, and 88110 nuts secure the rear wing rest at either end to the main frame.

Use the same hardware to install the opposite end.

IMPORTANT: The flat bar brace (2) of the wing rest must be facing forward.

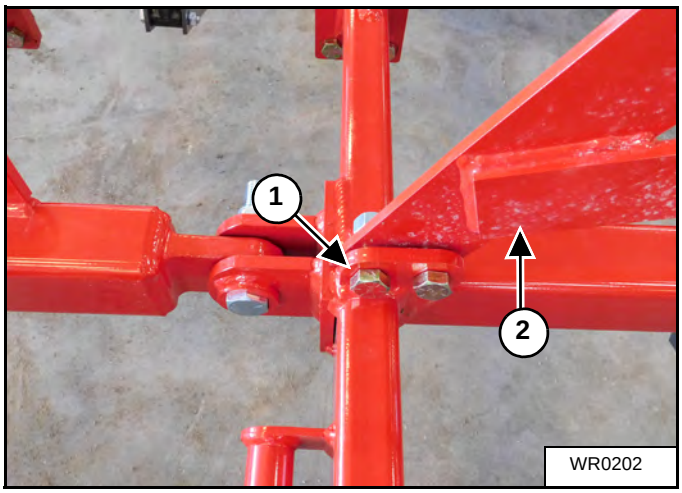

STEP 22

Use a 88503 5/8 x 3 x 5-1/4 inch U-bolt (1) with 88129 lock washers and 88126 nuts to secure the center of the wing rest to the main frame.

Use the same hardware to secure the other center point of the wing rest to the frame.

Repeat Steps 24 and 25 to install the front wing.

NOTE: The wing rests must be installed before proceed to the next step.

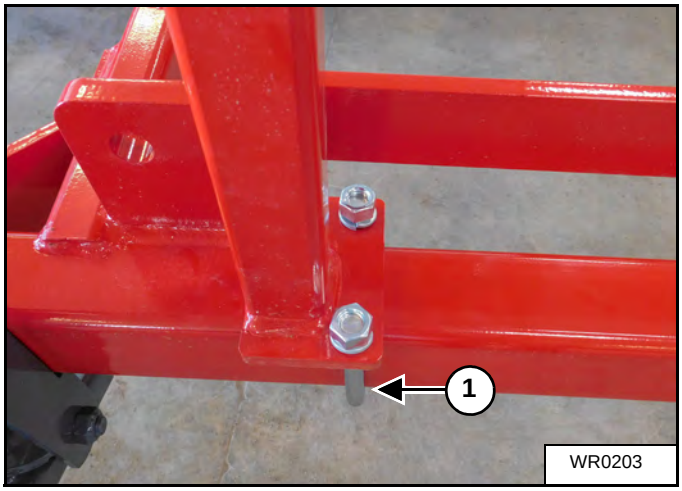

GAUGE WHEEL OUTER - MAINFRAME
SAME PARTS USED ON LH SIDE

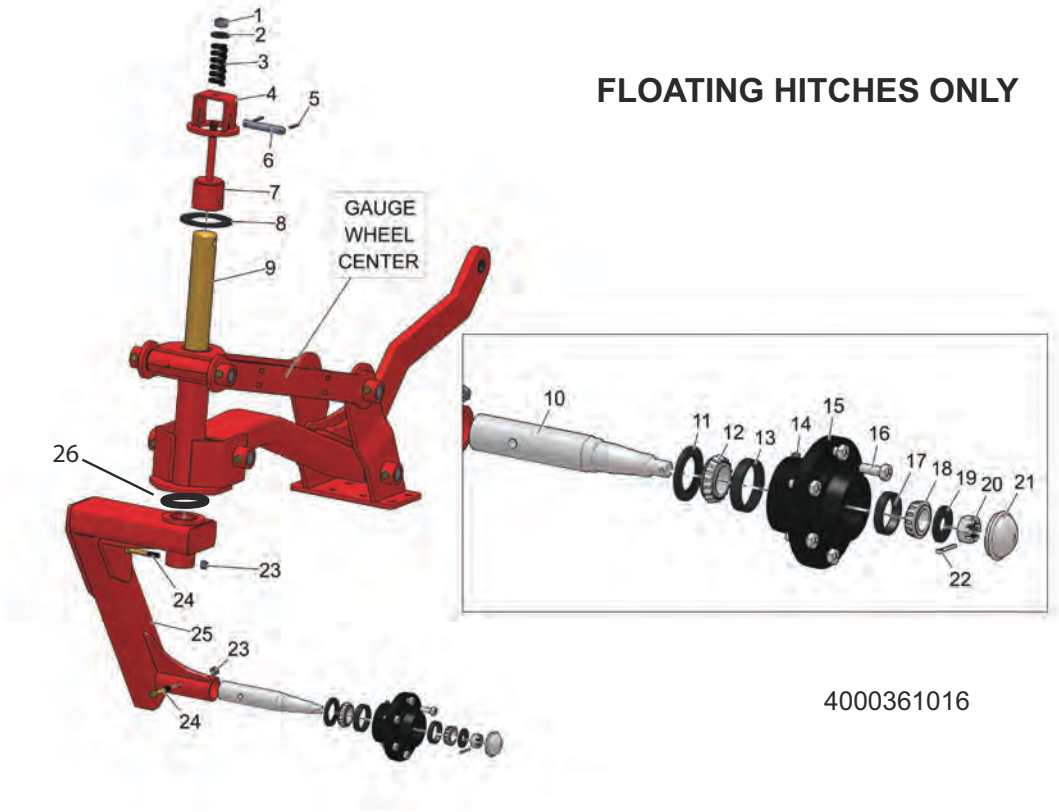

GAUGE WHEEL OUTER - MAINFRAME
SAME PARTS USED ON LH SIDE

ITEM	PART NUMBER	QTY	DESCRIPTION
1	P88611	1	NUT NLK 3/4-10NC 5Z
2	P88131	1	WASHER-FLAT: 3/4 (13/16 X 2 ACT) 2ZP
3	54832	1	FLAT
4	P233748	1	TOP DAMPER BRACKET
5	P88628	2	PIN ROLL 1/4DIA X 1-3/4Z
6	P233749	1	PIN (ZINC)
7	P233746	1	DAMPER CAP
8	P233742	1	DAMPER BREAKE PAD
9	4000361035	1	PIN-2.5 OD X 23
--	58167	1	2" HUB & SPINDLE SEE 14131
10	P14251	1	2" AXLE SPINDLE (LS5622F-30)
11	P58546	1	2" TRIPLE LIP SEAL
12	P14248	1	1.625 BORE BRG CONE (LM501349)
13	P14249	1	CUP BEARING (LM501310)
14	P88263	1	FITTING-GREESE: 1/8NPT 1610-BL (11/16) TAPE
15	P24097	1	2" PRESSED HUB (L783327-6-31 P30) W/CUPS
16	P88142	6	BLT WHL 1/2-20NF X 1-1/4 (13/16 HEAD) Z
17	P10344	1	BEARING CUP 2.328 OD (LM67010)
18	P10345	1	BEARING CONE 1-1/4 (LM67048)
19	P16094	1	WASHER: SPINDLE: 7/8ID ZP
20	P88340	1	NUT-CASTLE: 7/8-14NF 2ZP
21	P11381	1	DUST CAP
22	P88301	1	PIN-COTTER: 3/16DIA X 1-1/2 ZP
23	P88304	2	NUT-LOCK: 2 POS 1/2-20NF 2ZP
24	88460	2	BOLT-HEX: 1/2-20 X 3-1/2 8YZP
25	334276	1	SINGLE ARM WELDMENT
26	88859	1	OILITE THRUST WSHR 2.616ID X 3.895OD X 1/4THICK

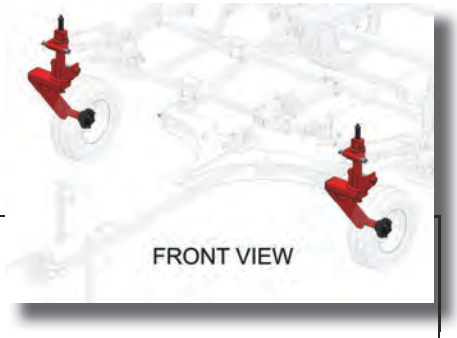

FLOATING HITCHES ONLY

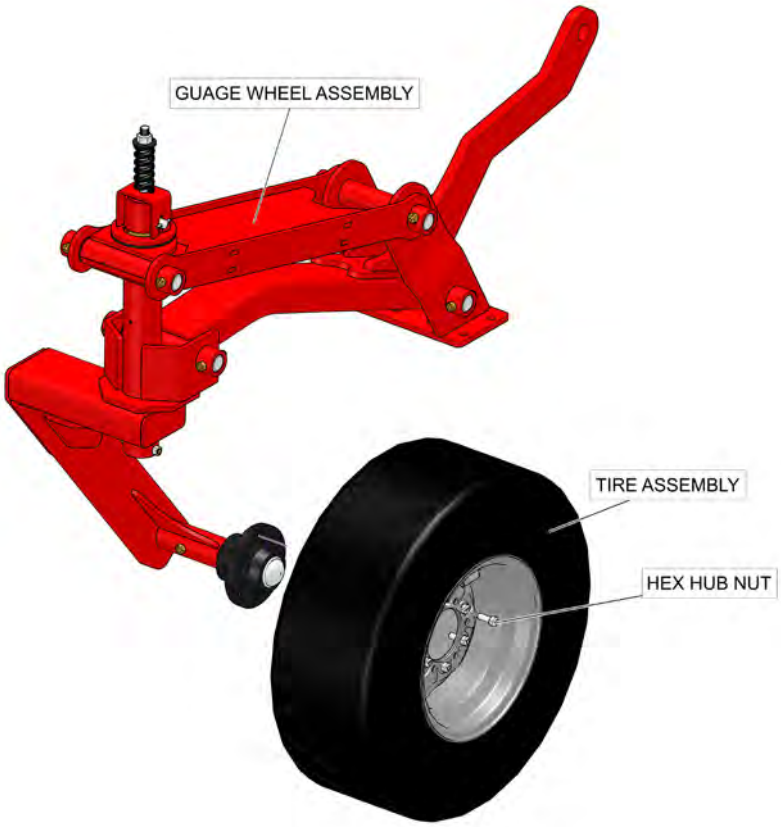

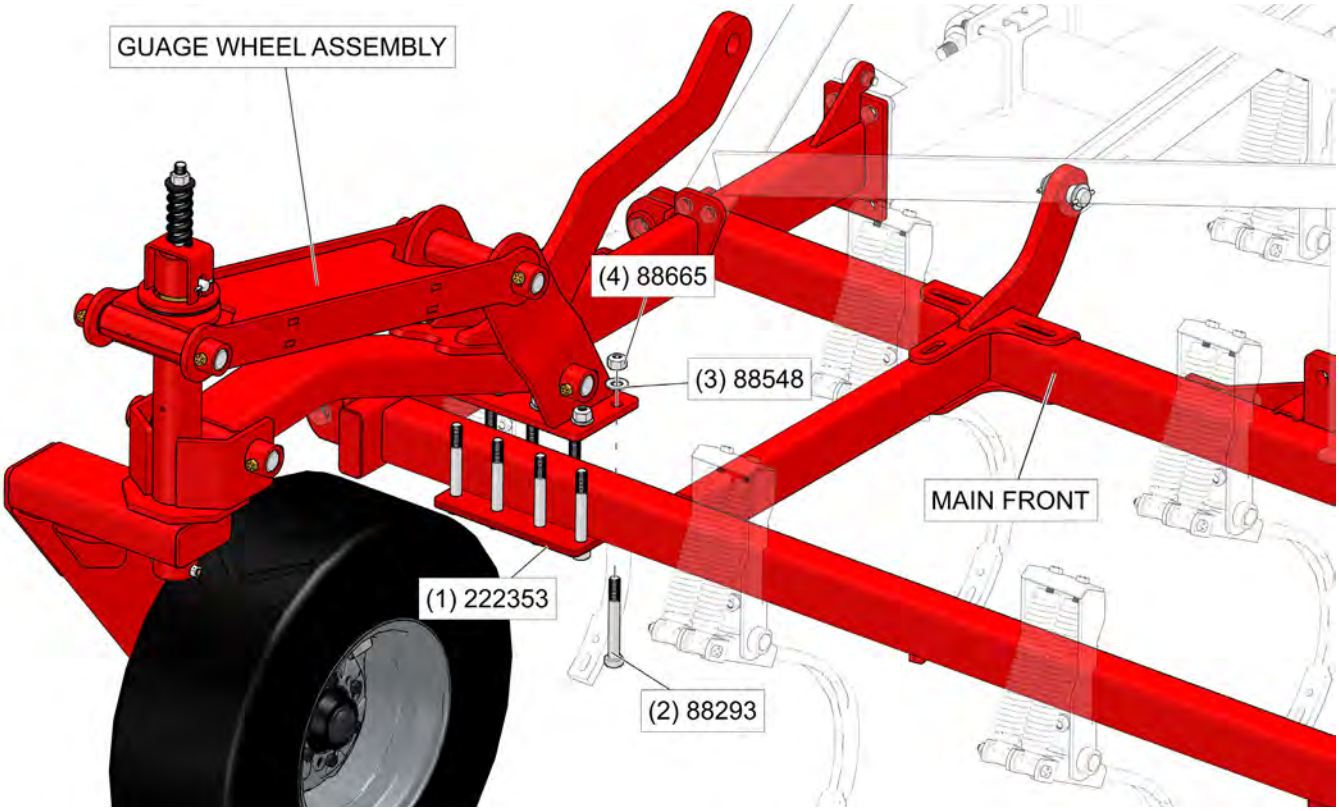

Please refer to Maintenance for torque

RH WHEEL ASSEBMLY - MAIN FRAME
SAME PARTS USED ON LH SIDE

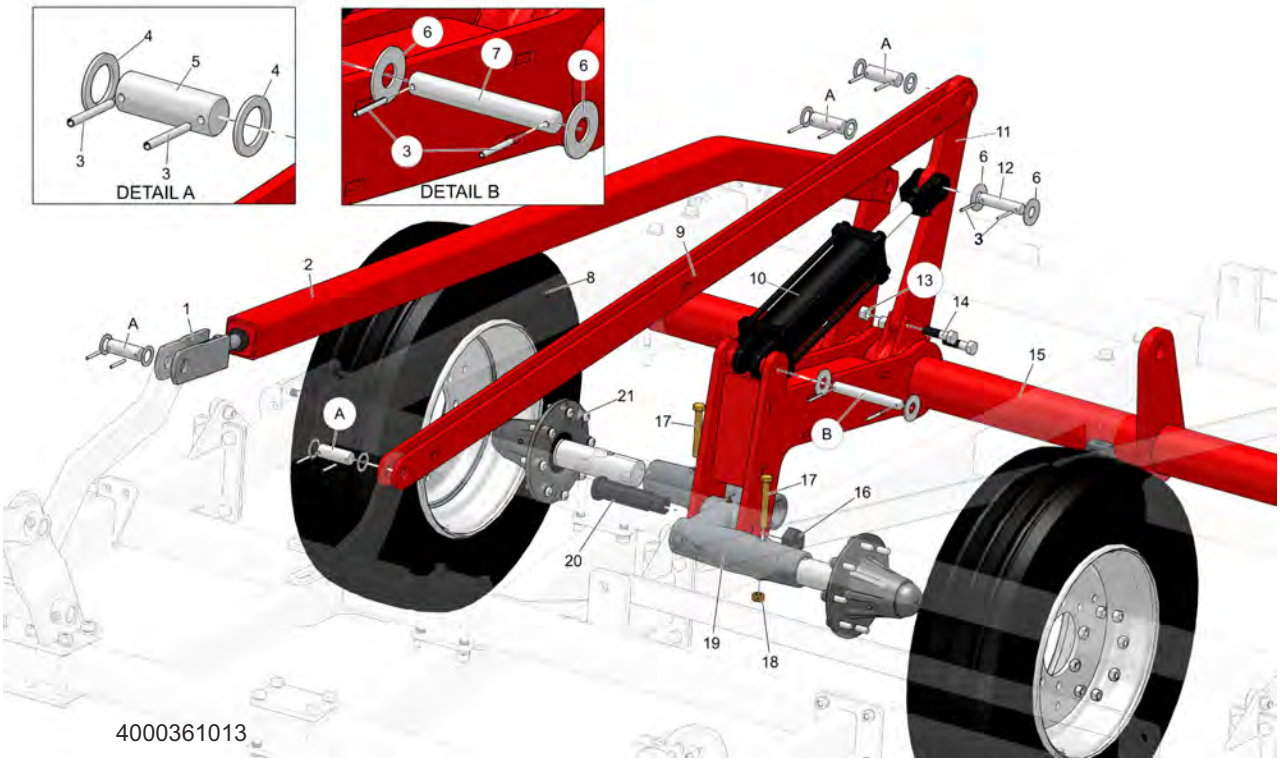

RH WHEEL ASSEMBLY - MAIN FRAME
SAME PARTS USED ON LH SIDE

ITEM	PART NUMBER	QTY	DESCRIPTION
1	P54800	1	CLEVIS ADJUST ROD
2	334628	1	WLD-MAINFRAME ANCHOR TUBE
3	P42484	8	PIN-ROLL: 1/4 X 2-1/4 ZP
4	P88440	4	BUSHING-MACHINERY: 1-1/4 X 1-7/8 14GA ZP
5	P68034	2	HEADLESS PIN(2) 1-1/4 X 3.88
6	P88196	4	WASHER-FLAT: 1 (1-1/16 X 2-1/2ACT) 2Z
7	334059	1	HEADLESS PIN 1 X 7.27
8	334274	2	VF285 & RIM MOUNTED ASSY
9	4000361005	1	WLD-ANCHOR LINK
10	P356862	1	HYD CYL 4 X 12 (AM-2552A)
11	334214	1	PRINCE CYLINDER WING ANCHOR
12	P42430	1	HEADLESS PIN(2) 1X3-7/16
13	P88611	2	NUT NLK 3/4-10NC 5Z
14	P88841	2	BOLT-HEX: 3/4-10NC X 2-3/4 5Z
15	334053	1	13 QX2 MAIN FRAME AXLE
16	P42082	1	NUT-JAM: 1-1/2 NF HYDRA 2ZP
17	P321721	2	BLT-HEX 5/8-11NC X 4.5 L9 YZP
18	P88369	2	NUT-LOCK: 2POS 5/8-11NC 5YZP
19	P356837	1	2-1/2 DIA CAST WALKER ASSEMBLY
20	P235245	1	TANDEM PIN
21	P247987	2	2-1/2IN HUB & SPNDL STUDS BLK

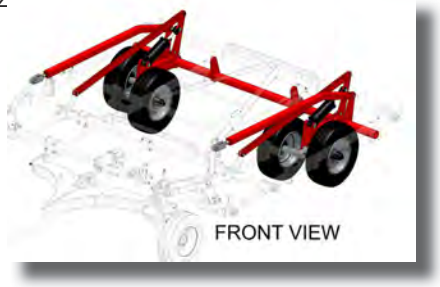

Inner Wing Parallel Link Gauge Wheel Assembly

RH AXLE & WHEEL ADJUSTMENT TUBE - INNER WING
SAME PARTS USED ON LH SIDE

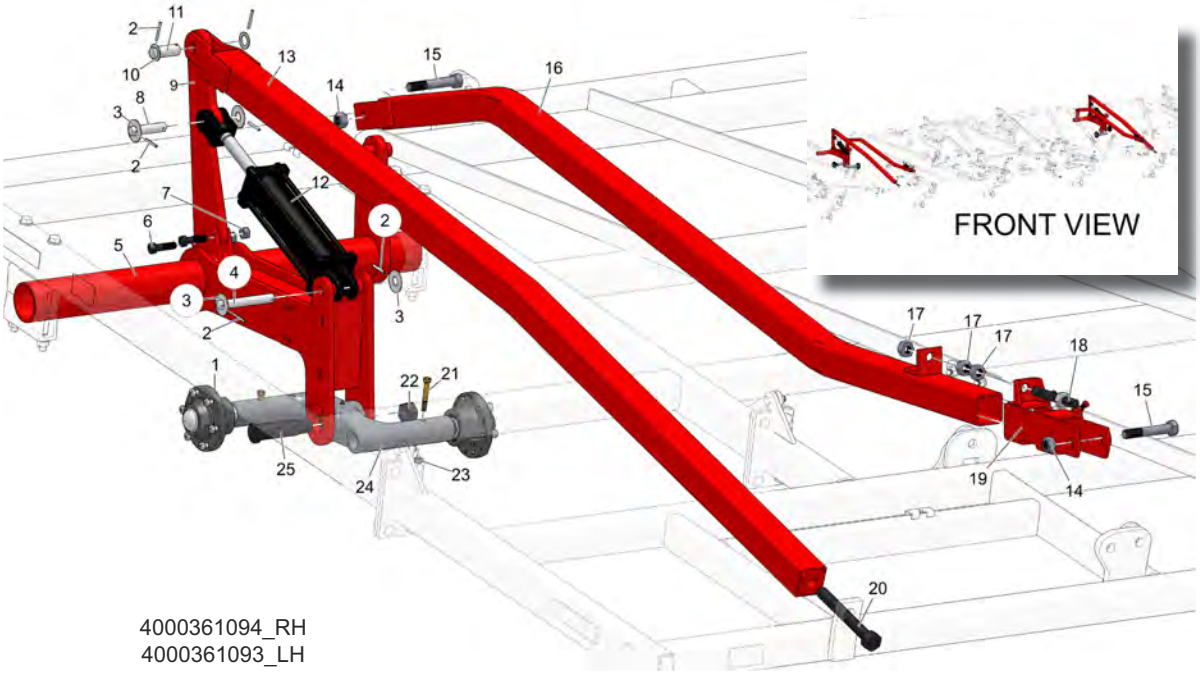

RH AXLE & WHEEL ADJUSTMENT TUBE - INNER WING
SAME PARTS USED ON LH SIDE

ITEM	PART NUMBER	QTY	DESCRIPTION
1	58167	2	2" HUB & SPINDLE SEE 14131
2	P42484	6	PIN-ROLL: 1/4 X 2-1/4 ZP
3	P88196	4	WASHER-FLAT: 1 (1/1/16 X 2-1/2ACT) 2ZP
4	334059	1	HEADLESS PIN 1 X 7.27
5	334060	1	WLD-RIGHT INSIDE WING AXLE
--	334062	--	WLD-LEFT INSIDE WING AXLE
6	P88841	2	BOLT-HEX: 3/4-10NC X 2-3/4 5Z
7	P88611	2	NUT NLK 3/4-10NC 5Z
8	P42430	1	HEADLESS PIN(2) 1X3-7/16
9	334214	1	PRINCE CYLINDER WING ANCHOR
10	P88440	2	BUSHING-MACHINERY: 1-1/4 X 1-7/8 14GA ZP
11	P68034	1	HEADLESS PIN(2) 1-1/4X3.38
12	334634	1	WING ANCHOR TUBE WELDMENT
13	P358313	1	3-3/4 X 12 HYD CYLINDER ASSEMBLY
14	P89075	2	NUT-NYLOCK: 1-8NC 2ZP
15	P88264	2	BOLT-HEX: 1-8NC X 6 5ZP
16	334620	1	WING GAUGE WHEEL ADJUSTMENT
17	P88125	3	NUT-HEX: 1-8NC 5ZP
18	P48890	1	ADJUSTMENT ROD ASSEMBLY
19	334622	1	WING GAUGE WHEEL ADJUSTMENT LINK
20	P69799	1	ADJUSTER ROD (11.5)
21	88460	2	BOLT-HEX: 1/2-20 X 3-1/2 8YZP
22	P42082	1	NUT-JAM: 1-1/2NF HYDRA 2ZP
23	P88304	2	NUT-LOCK: 2POS 1/2-20NF 2ZP
24	359438	1	2 DIA CAST WALKER ASSEMBLY
25	235245	1	TANDEM PIN

RH GAUGE WHEEL OUTER: INNER & OUTER WING
SAME PARTS USED ON LH SIDE

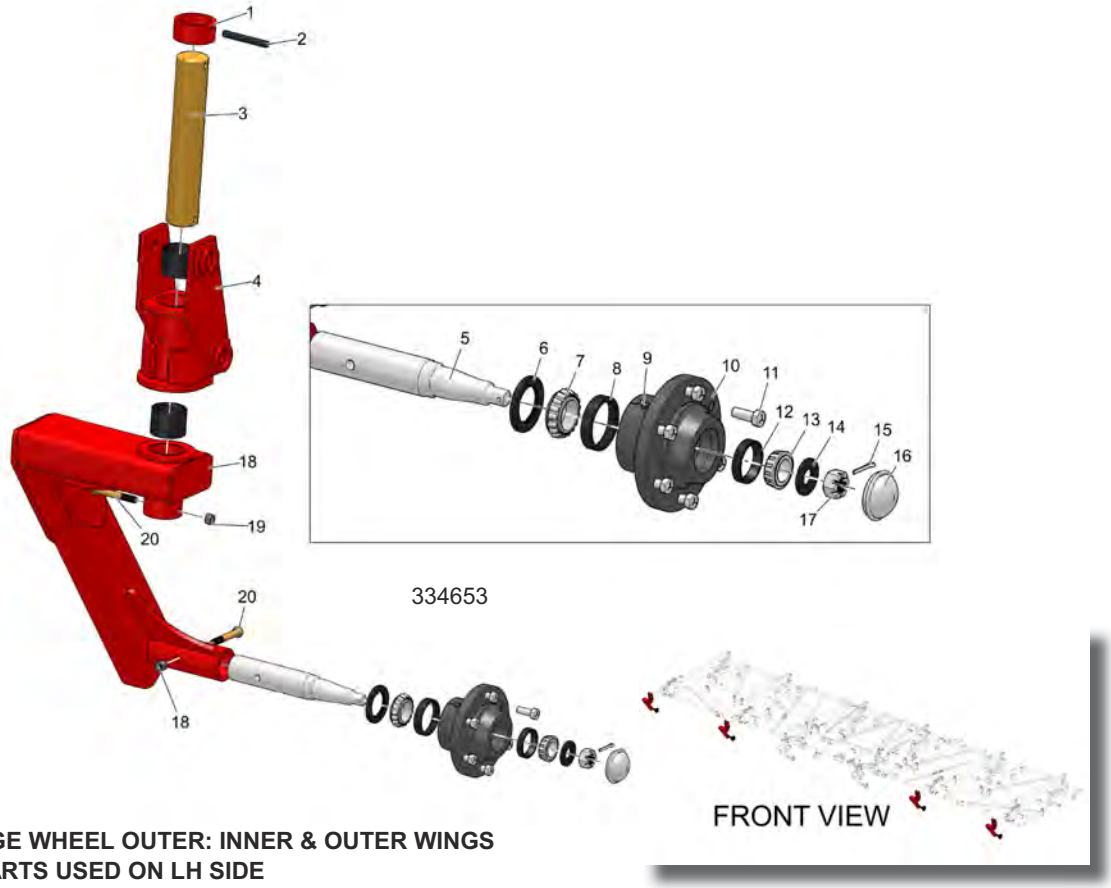

RH GAUGE WHEEL OUTER: INNER & OUTER WINGS
SAME PARTS USED ON LH SIDE

ITEM	PART NUMBER	QTY	DESCRIPTION
1	4000361051	1	COLLAR-2.56 ID
2	88858	1	PIN-ROLL: 1/2 DIA X 4 ZP
3	4000361049	1	PIN-2.5 OD X 13.7
4	4000361045	--	ASSY-WING GAUGE CASTER
--	4000361046	1	WLD-WING GAUGE CASTER
--	P88550	2	FTG GRS 1/4-28 3038-B
--	58167	1	2" HUB & SPINDLE SEE 14131
5	P14251	1	2" AXLE SPINDLE (LS5622F-30)
6	P58546	1	2" TRIPLE LIP SEAL
7	P14248	1	1.625 BORE BRG CONE (LM501349)
8	P14249	1	CUP BEARING (LM501310)
9	P88263	1	FITTING-GREASE: 1/8NPT 1610-BL (11/16) TAPE
10	P24097	1	2" PRESSED HUB (L783327-6-31 P30) W/CUPS
11	P88142	6	BLT WHL 1/2-20NF X 1-1/4 (13/16 HEAD) Z
12	P10344	1	BEARING CUP 2.328 OD (LM67010)
13	P10345	1	BEARING CONE 1-1/4 (LM67048)
14	P16094	1	WASHER: SPINDLE: 7/8ID ZP
15	P88301	1	PIN-COTTER: 3/16DIA X 1-1/2 ZP
16	P11381	1	DUST CAP
17	P88340	1	NUT-CASTLE: 7/8-14NF 2ZP
18	334276	1	SINGLE ARM WELDMENT
19	P88304	2	NUT-LOCK: 2 POS 1/2-20NF 2ZP
20	88460	2	BOLT-HEX: 1/2-20 X 3-1/2 8YZP

RH GAUGE WHEEL CENTER INNER & OUTER WINGS
SAME PARTS USED ON LH SIDE

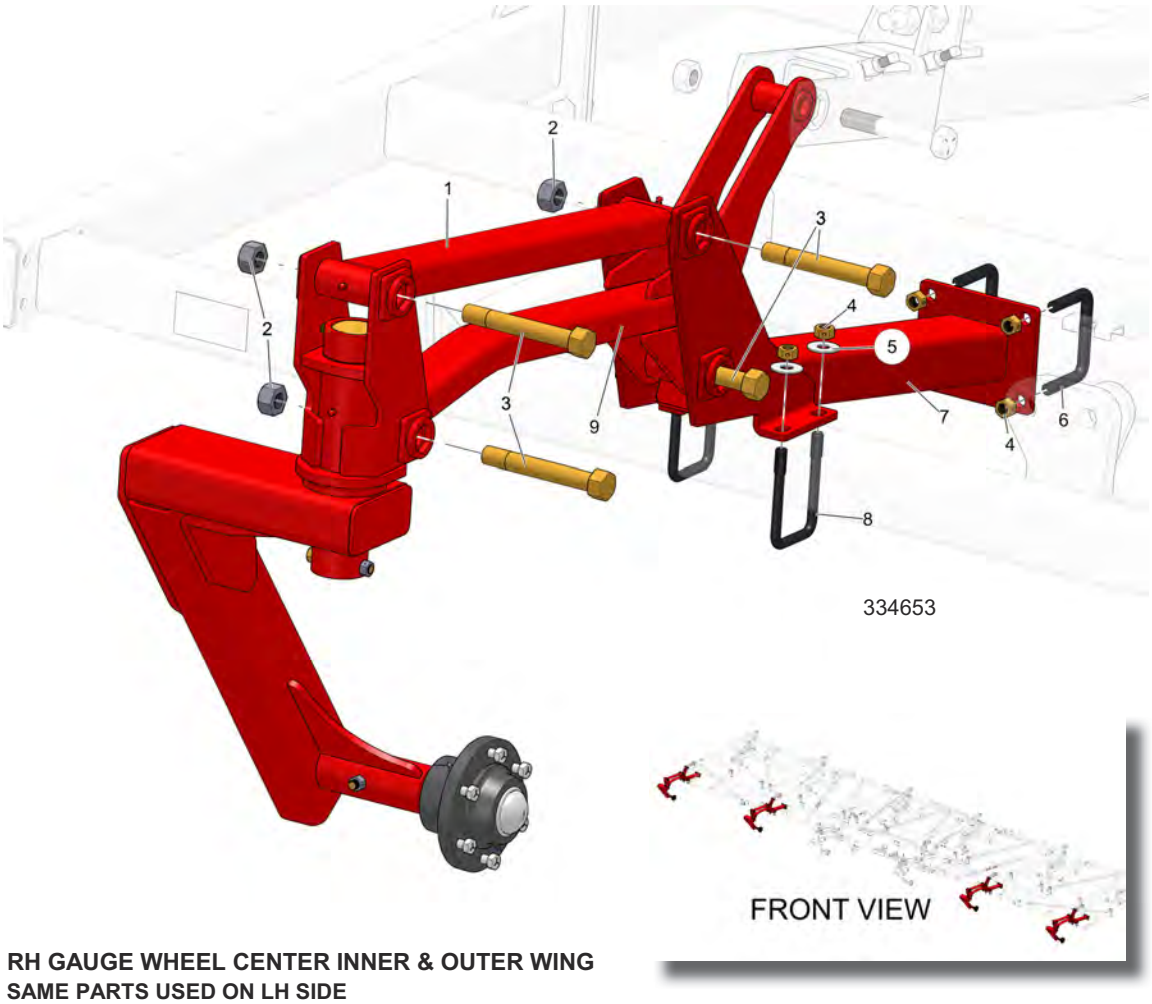

RH GAUGE WHEEL CENTER INNER & OUTER WING
SAME PARTS USED ON LH SIDE

ITEM	PART NUMBER	QTY	DESCRIPTION
1	4000361042	--	ASSY-WING GAUGE UPPER ARM
--	4000361043	1	WLD-WING GAUGE UPPER ARM
--	P88550	1	FTG GRS 1/4-28 3038-B
--	P33515	4	BUSHING, SPRING TENSION (1 IN)
2	P89075	4	NUT-NYLOCK: 1-8NC 2ZP
3	P221336	4	BLT HEX, 1 IN NC X 6.88 IN (1.5 IN) GR. 5
4	P88369	8	NUT-LOCK: 2 POS 5/8-11NC 5YZP
5	P88277	4	WASHER-FLAT: 5/8 (11/19 X 1-3/4ACT) 2ZP
6	P88388	2	BLT-U 5/8-11NC X 4 X 3-1/4 Z
7	P220853	1	GAUGE WHEEL MOUNT
8	P88503	2	BLT-U 5/8-11NC X 3 X 5-1/4 Z
9	4000361040	--	ASSY-WING GAUGE LOWER ARM
--	4000361041	1	WLD-WING GAUGE LOWER ARM
--	88550	1	FTG GRS 1/4-28 3038-B (REAR)
--	89305	1	FTG GRS 1/4-28NF 90 DEG 3054-B Z (FRONT)
--	33515	4	BUSHING, SPRING TENSION (1 IN)

Inner Wing Parallel Link Gauge Wheel Assembly (Cont'd)

RH AXLE & WHEEL ADJUSTMENT TUBE - OUTER WING
SAME PARTS USED ON LH SIDE

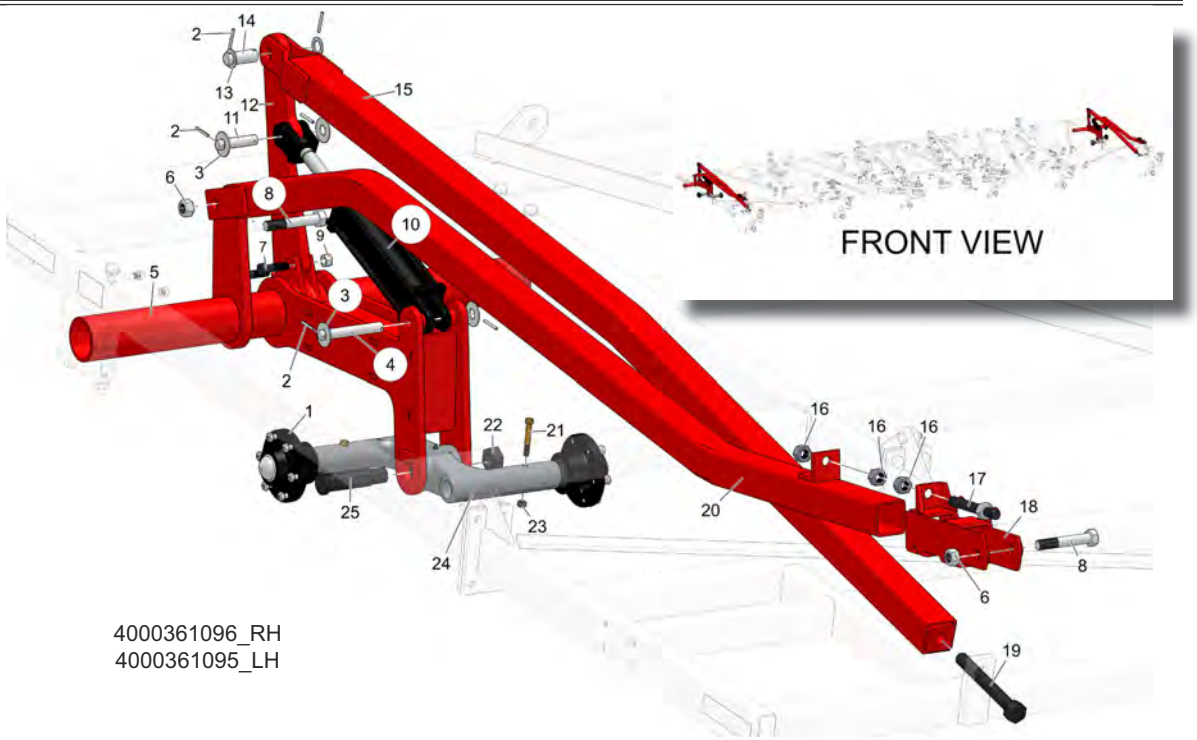

RH AXLE & WHEEL ADJUSTMENT TUBE - OUTER WING
SAME PARTS USED ON LH SIDE

ITEM	PART NUMBER	QTY	DESCRIPTION
1	58167	2	2" HUB & SPINDLE SEE 14131
2	P42484	6	PIN-ROLL: 1/4 X 2-1/4 ZP
3	P88196	4	WASHER-FLAT: 1 (1/1/16 X 2-1/2ACT) 2ZP
4	334059	1	HEADLESS PIN 1 X 7.27
5	334061	1	WLD-RIGHT OUTSIDE WING AXLE
--	334659	--	WLD-LEFT OUTSIDE WING AXLE
6	P89075	2	NUT-NYLOCK: 1-8NC 2ZP
7	P88841	2	BOLT-HEX: 3/4-10NC X 2-3/4 5Z
8	P88264	2	BOLT-HEX: 1-8NC X 6 5ZP
9	P88611	2	NUT NLK 3/4-10NC 5Z
10	P358312	1	3-1/2 X 12 HYD CYLINDER ASSEMBLY
11	P42430	1	HEADLESS PIN(2) 1X3-7/16
12	334214	1	PRINCE CYLINDER WING ANCHOR
13	P88440	2	BUSHING-MACHINERY: 1-1/4 X 1-7/8 14GA ZP
14	P68034	1	HEADLESS PIN(2) 1-1/4X3.38
15	334634	1	WING ANCHOR TUBE WELDMENT
16	P88125	3	NUT-HEX: 1-8NC 5ZP
17	P48890	1	ADJUSTMENT ROD ASSEMBLY
18	334622	1	WING GAUGE WHEEL ADJUSTMENT LINK
19	P69799	1	ADJUSTER ROD (11.5)
20	334620	1	WING GAUGE WHEEL ADJUSTMENT
21	88460	2	BOLT-HEX: 1/2-20 X 3-1/2 8YZP
22	P42082	1	NUT-JAM: 1-1/2NF HYDRA 2ZP
23	P88304	2	NUT-LOCK: 2POS 1/2-20NF 2ZP
24	359438	1	2 DIA CAST WALKER ASSEMBLY
25	235245	1	TANDEM PIN

Inner Wing Fold Assembly

STEP 23

Insert 48523 wing lift bushing (1) into the 221267 wing lift link as shown.

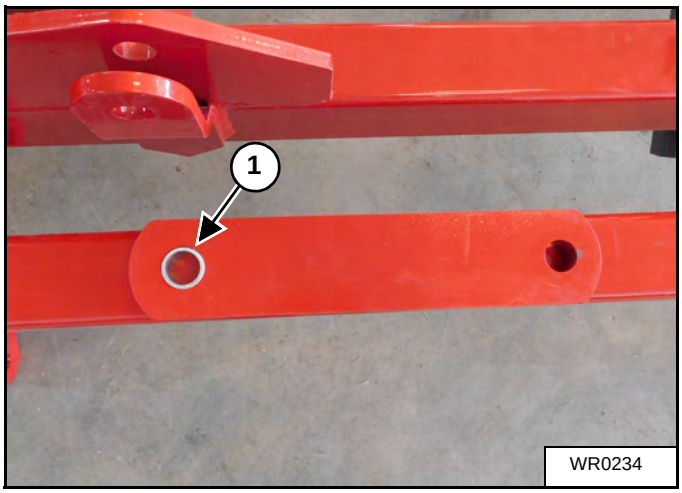

STEP 24

Use a 88447 1 x 3-1/2 grade 5 bolt and 89075 nylon locknut to secure the bushing end of the wing lift link (1) and 245306 link strap (2) to the frame as shown.

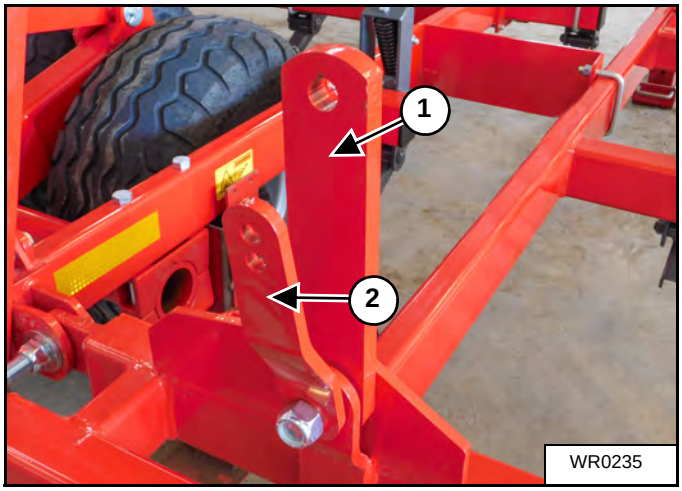

Inner Wing Fold Assembly (Cont'd)

STEP 25

Use a 88580 1 x 4-1/2 inch grade 5 bolt (1) and 89075 nylon locknut to secure the end of the lift link arm to the frame.

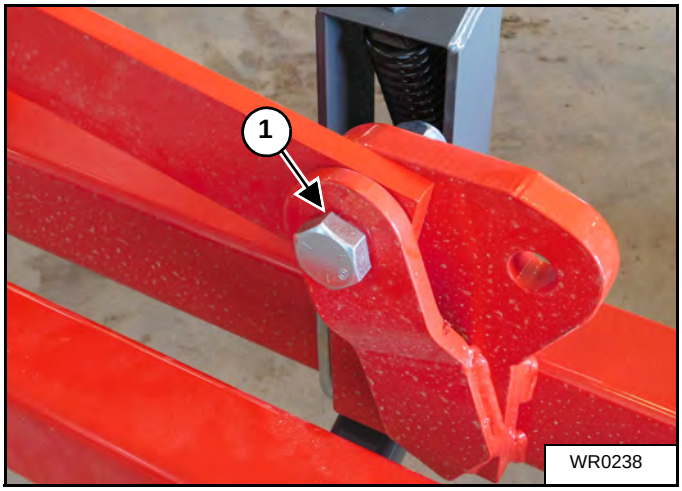

STEP 26

Use a 42473 1/2 x 2-3/8 inch pin (1) and two 42484 2-1/4 inch roll pins secure the base end of the 20966F 5 x 30 wing lift cylinder to frame.

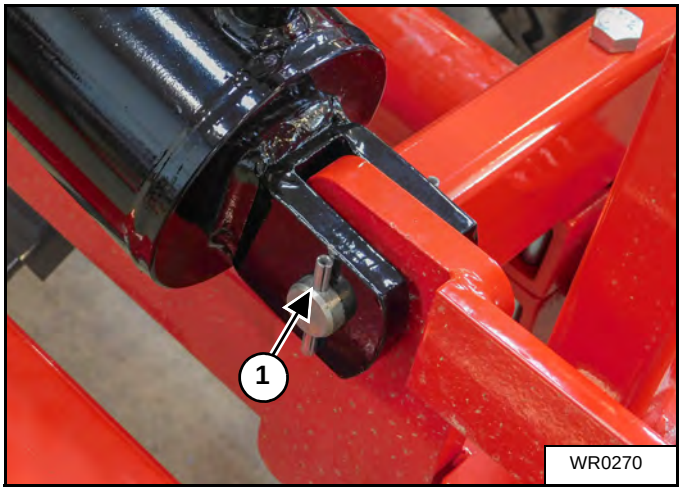

STEP 27

Note: Install the bolt so the nut will be facing back on the slot as shown.

Use a 355975 bolt (1), two 86196 flat washers (2) and a 89075 locknut (3) to install the rod end of the cylinder to the wing lift links.

Use the hydraulic cylinder to align the ends of the links.

Tighten the bolt (1) until the bolt cannot be freely turned and loosen the nut one complete turn.

Follow Steps 61 through 65 for all wing hinge installations.

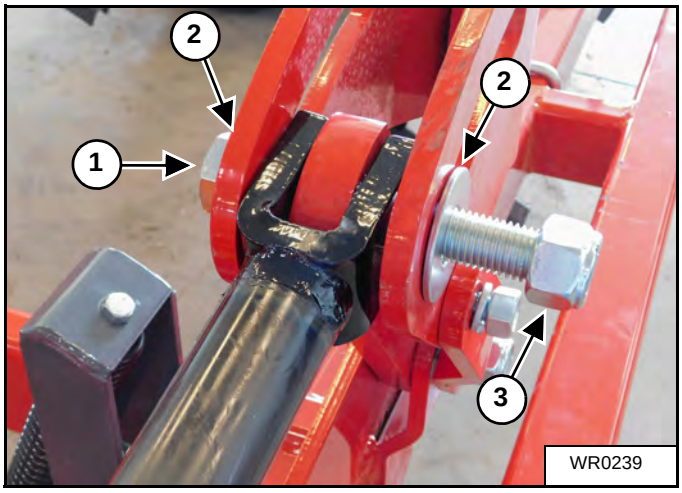

Inner Wing Fold Assembly (Cont'd)

STEP 28

The 221356 outer wing rest (1) is angled to the outside of the frame and the 221358 inner wing rest (2) is angled to the inside of the frame.

Use two 88503 5/8 x 3 x 5-1/4 inch U-bolts, four 88129 lock washers, and four 88126 nuts to bolt the outer wing rest to the most outside frame crossmember.

Use two 88503 5/8 x 3 x 5-1/4 inch U-bolts, four 88129 lock washers, and four 88126 nuts to bolt the inner wing rest to the inside rear frame crossmember.

NOTE: Do not tighten the nuts.

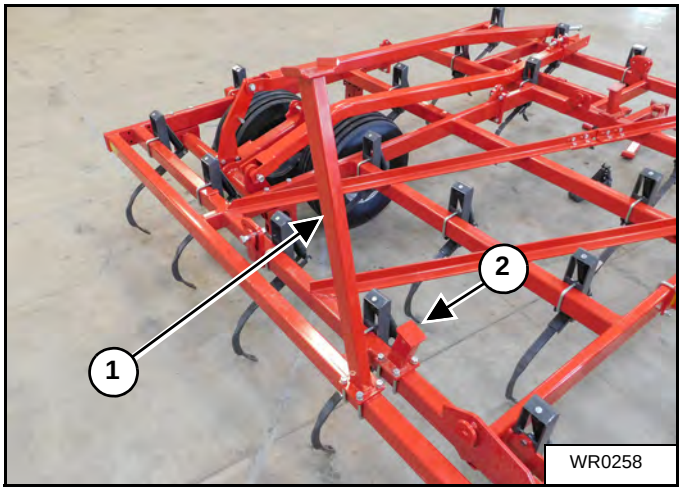

STEP 29

Be sure the measurement from center of the bolt (1) of link between main and wing frame to edge (2) of all rests is 30 3/4 inches (78.1 cm).

NOTE: The inner (3) and outer (4) wing rest mounts must align as shown.

Tighten all nuts when the rests are positioned correctly.

Follow Steps 56 and 57 for the other rear wing rests.

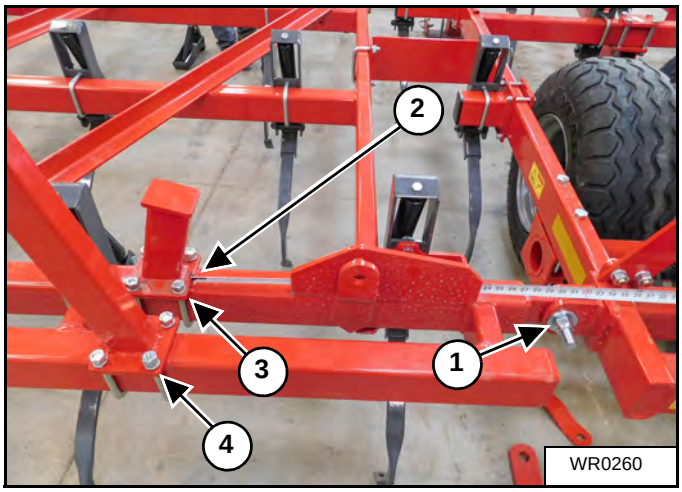

STEP 30

Use two 88503 5/8 x 3 x 5-1/4 inch U-bolts, four 88129 lock washers, and four 88126 nuts to bolt the inner wing rest (1) to the inside rear frame crossmember.

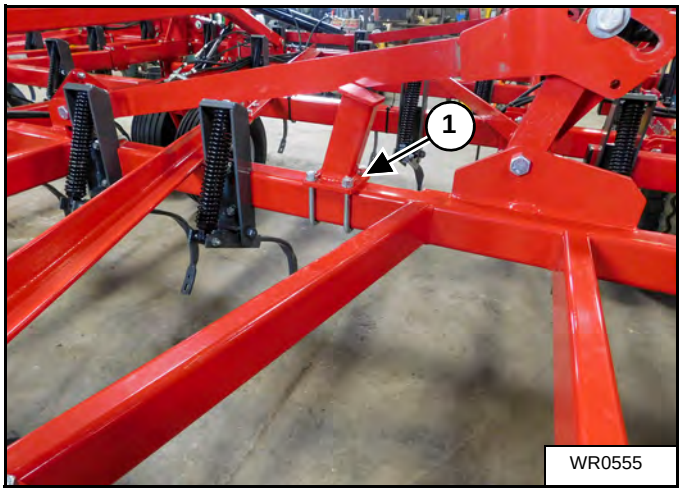

Inner Wing Fold Assembly (Cont'd)

STEP 31

Use two 88503 5/8 x 3 x 5-1/4 inch U-bolts, four 88129 lock washers, and four 88126 nuts to bolt the outer wing rest (1) to the most outside frame crossmember.

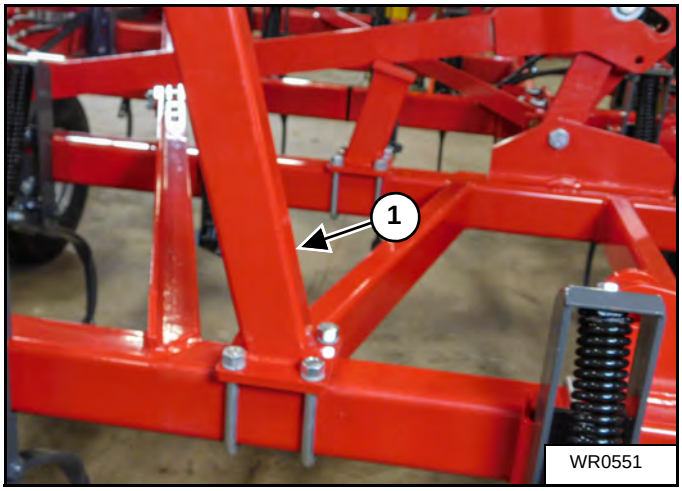

WR0551

STEP 32

Be sure the measurement from the center of the bolt (1) of link between main and wing frame to edge (2) of all rests is 30 3/4 inches (78.1 cm).

NOTE: The inner (3) and outer (4) wing rest mounts must align as shown.

Tighten all nuts when the rests are positioned correctly.

Follow Steps 66 through 70 for the other front wing rests.

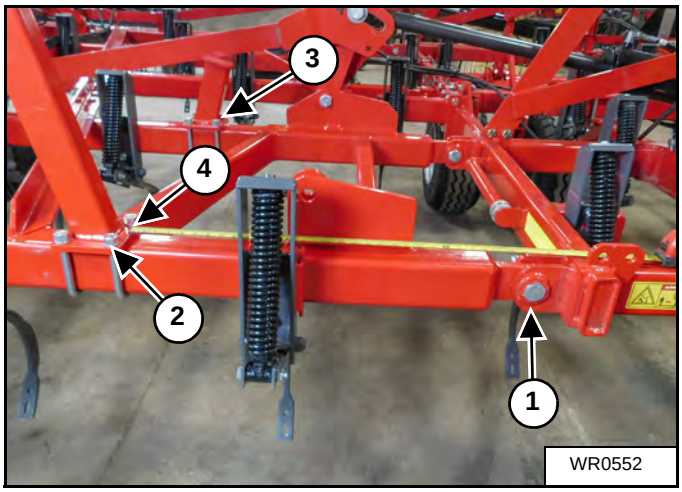

WR0552

STEP 33

Place the hinge assembly on the **front** outside edge of the wing frame.

Using four 9/16 x 4 inch grade 5 bolts (1), lock washers and nuts to secure the hinge assembly to the frame.

NOTE: Do not tighten the bolts.

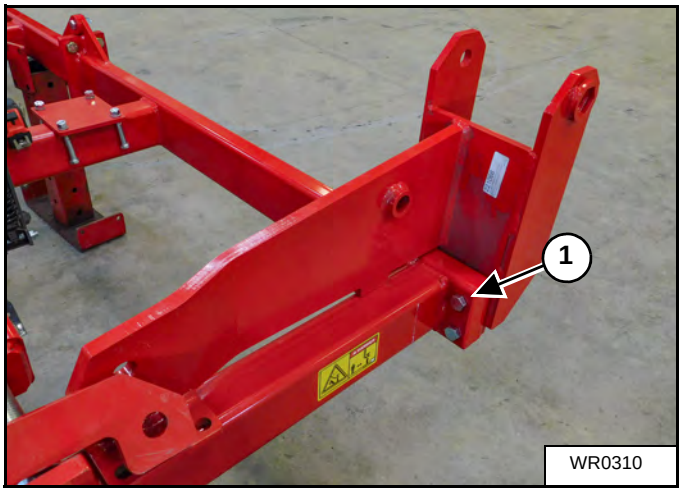

WR0310

Inner Wing Fold Assembly (Cont'd)

STEP 34

Secure the inside the hinge assembly to the frame using two 88503 5/8 x 3 x 5-1/4 inch U-bolts (1), four 88129 lock washers and four 88126 nuts.

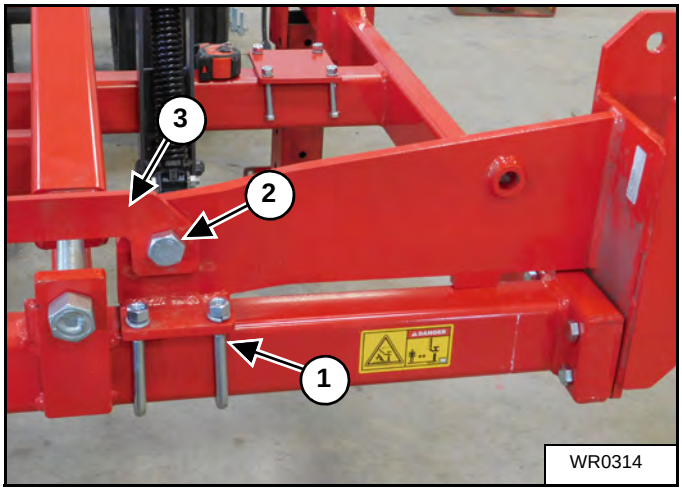

STEP 35

Use a 88393 1 x 2-1/2 inch grade 5 bolt (1) and 89075 nylon locknut (2) to install the 350611 right-hand anchor strap and 350605 left-hand anchor strap to the hinge assembly.

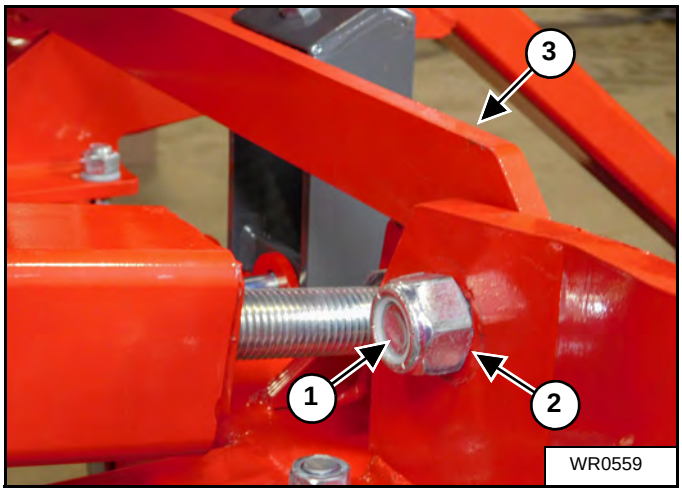

NOTE: Between the hinge assembly (4) and anchor strap (3) place the two 88196 1 inch flat washers (5) as shown.

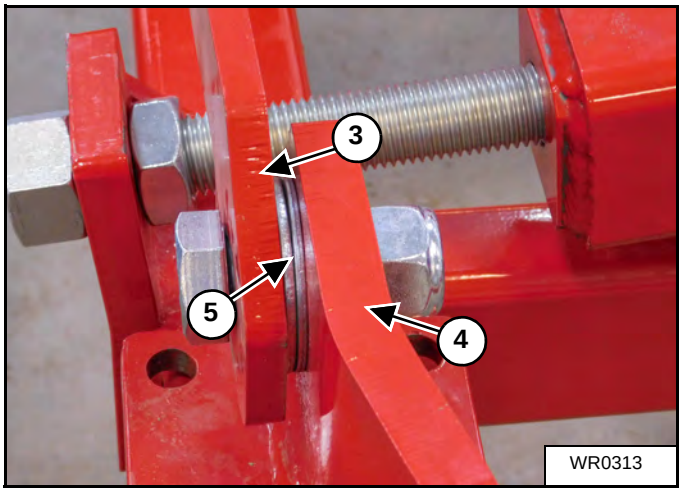

Inner Wing Fold Assembly (Cont'd)

STEP 36

Use a 42473 1 x 3 inch pin (1) and two 42484 roll pins to install the base end of the 51229F1 4 x 30 wing hinge cylinder to the frame.

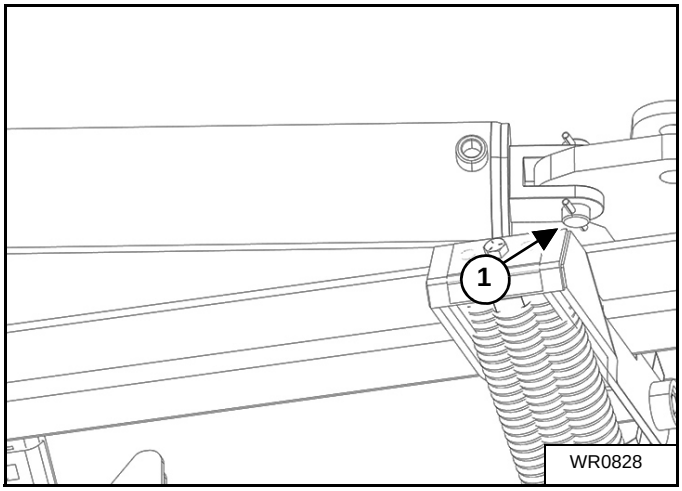

STEP 37

Fasten the other end of the anchor strap using a 88398 1 x 4 inch grade 5 bolt (1), seven 88196 1 inch flat washers and 89050 nylon locknut.

Two flat washers (2) and five flat washers (3) are positioned as shown.

Begin tightening all hardware in the following order:

1. Inner bolt of the anchor strap
2. Outside bolt of the anchor strap
3. Inner U-bolt of the hinge assembly
4. Bolts holding the frame to the rear axle
5. The U-bolts of the hinge assembly
6. Tighten the bolts from Step 71.

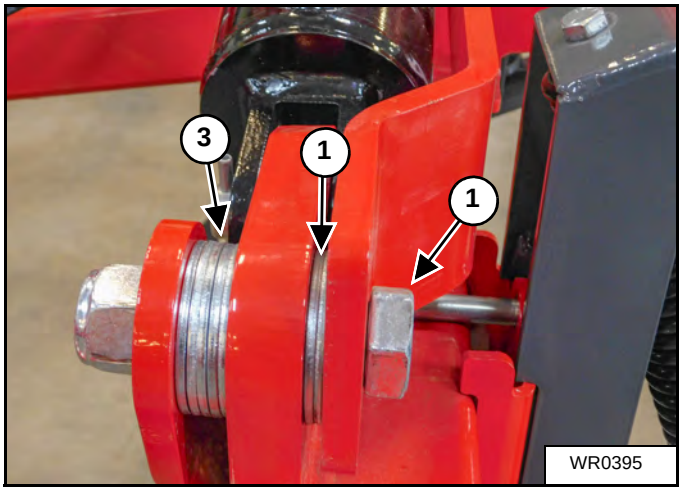

Follow Steps 71 through 75 to install the other front wing hinge.

STEP 38

To install the rear hinge assembly, remove the two 89165 bolts (1) that secure the axle shaft to the frame.

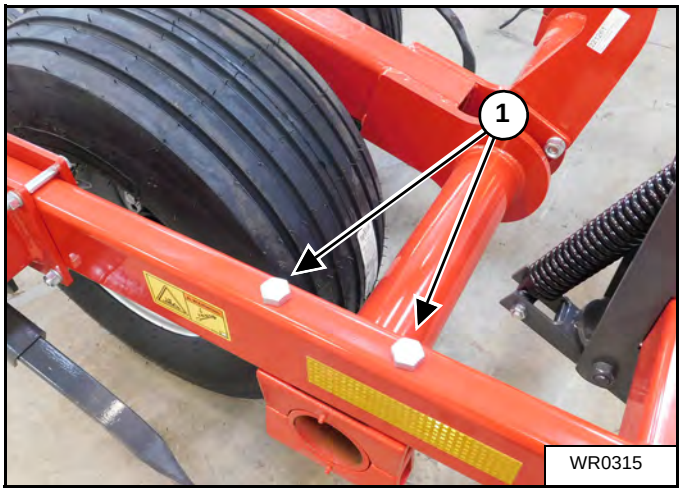

Inner Wing Fold Assembly (Cont'd)

STEP 39

Place the rear hinge assembly on the outer edge, using the two bolts (1), lock washers and nuts that were removed in Step 65. Install four 88292 5/8 x 3-1/2 grade 5 bolts (2), lock washers and nuts through the frame.

NOTE: Do not tighten the bolts.

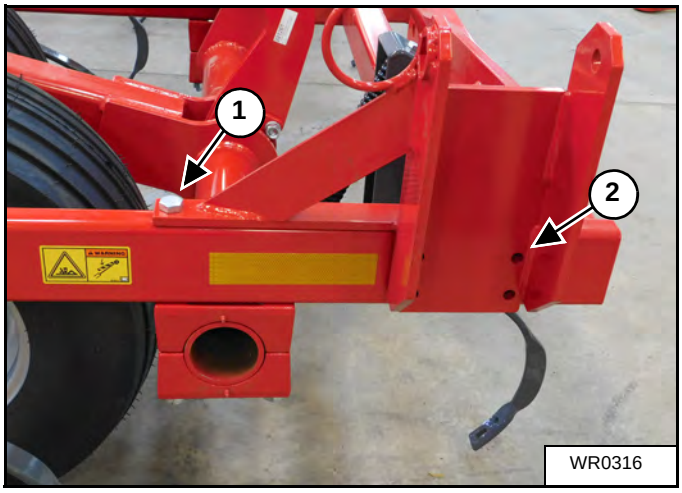

STEP 40

Use two 88503 5/8 x 3 x 5-1/4 inch U-bolts (1), four 88129 lock washers and four 88126 nuts to secure the inside end of the hinge assembly to the frame.

Use one 88393 1 x 2-1/2 inch grade 5 bolt (2), two 88196 flat washers between the strap and the hinge assembly and two 89075 nylon locknuts to fasten the anchor strap (3) to the hinge assembly.

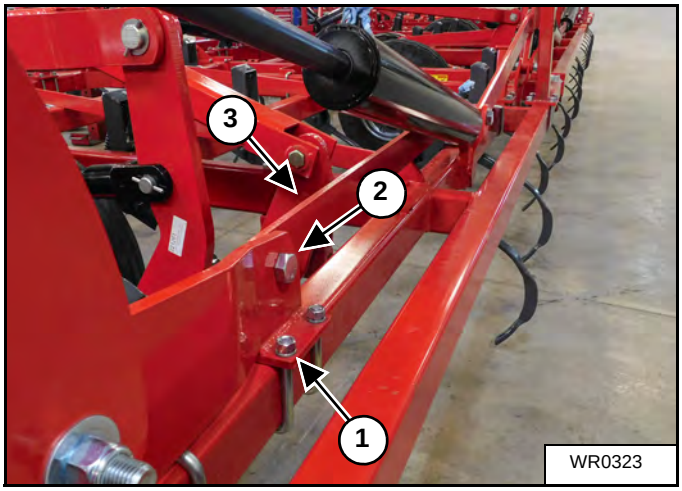

STEP 41

Secure the other end of the anchor strap using a 88398 1 x 4 inch grade 5 bolt (1), 89075 nylon locknut and two 88196 flat washers.

NOTE: When fastening the hinge assembly and anchor strap place the two flat washers as shown in image (2).

Begin tightening all hardware in the following order:

1. Inner bolt of the anchor strap
2. Outside bolt of the anchor strap
3. Inner U-bolt of the hinge assembly
4. Bolts holding the frame to the rear axle
5. The U-bolts of the hinge assembly
6. Tighten the bolts from Step 77.

Follow Steps 76 through 79 or installation of the other rear wing hinge.

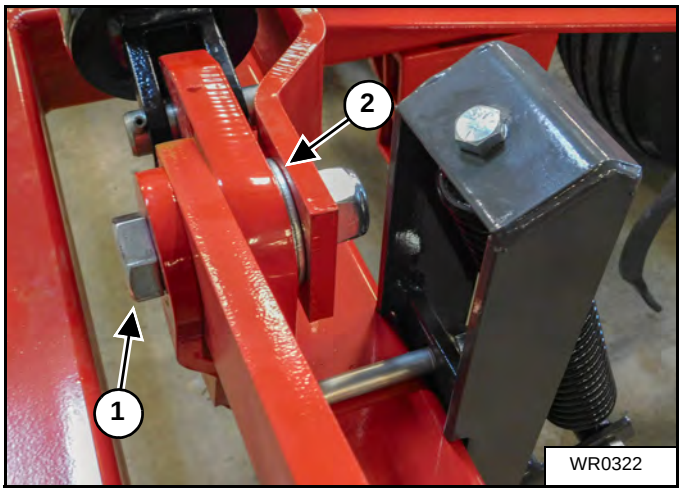

Outer Wing Assembly (Cont'd)

STEP 42

Stand the outer wing (1) next to the inner wing frame on a sheet of plywood.

Carefully place the outer wing onto the stands 24 1/2 inches (62.2 cm) off the ground aligned with the inner wing.

Remove the band securing the front section (2) and unfold.

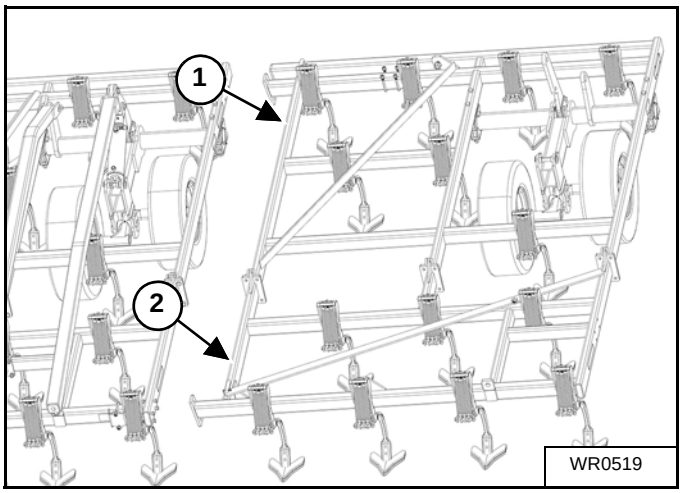

STEP 43

Loosen the hinge bolt (1) on the pivot point for the front of the outer wing frame.

Carefully flip the front section and adjust the frame to align the bolt holes (2).

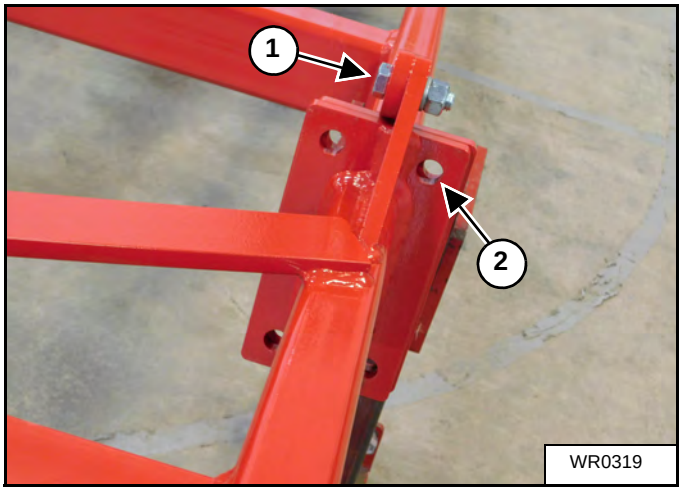

STEP 44

Use four 88290 3/4 x 2 inch grade 8 bolts (1), 88130 lock washers and 88110 nuts (2) to secure the frame flanges.

NOTE: Be sure to install the bolts from front to back.

Use Steps 81 and 82 for the other hinges on the outer wing frames.

Tighten the pivot bolts (3) that were loosened in Step 81 and all hinge flange bolts (1).

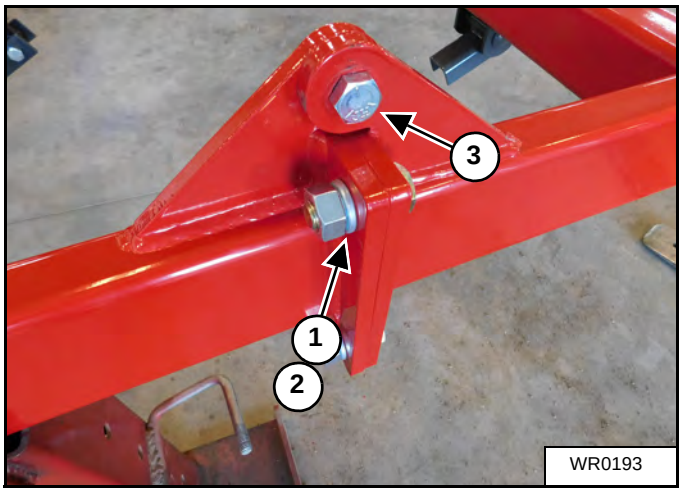

Outer Wing Assembly (Cont'd)

STEP 45

Use four 88292 5/8 x 3-1/2 inch grade 5 bolts (1), 88129 lock washers and 88126 nuts to secure the hinge to the inner wing frame.

Use two 88503 5/8 x 3 x 5-1/4 inch U-bolts (2), four 88129 lock washers and four 88126 nuts to secure the end of the hinge to the inner wing frame.

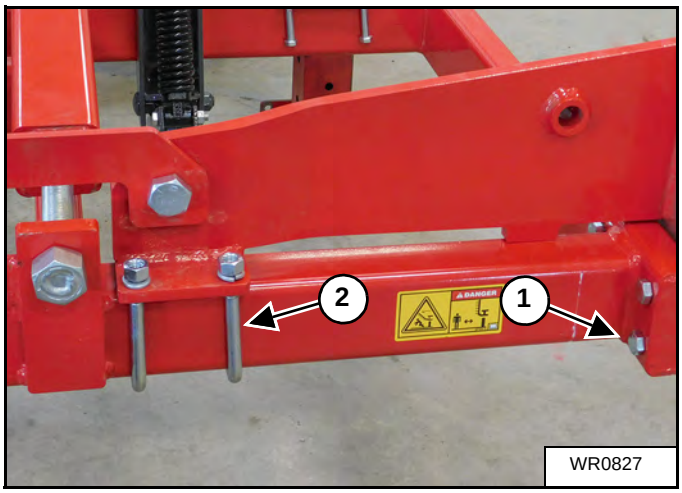

STEP 46

Install the 221695 wing latch (1) on the inside of both the front and rear hinge using a 42484 1/4 x 1-1/2 inch roll pin (2).

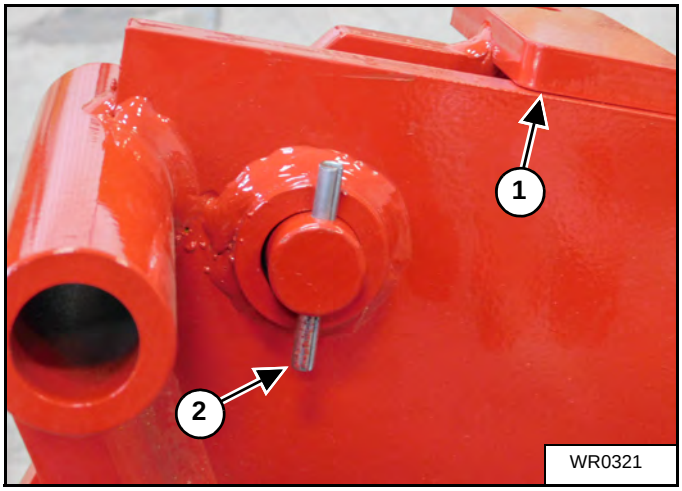

STEP 47

Insert a 88901 1 x 9-1/2 hinge grade 5 bolt (1), 88196 washer (2) and 89075 locknut (3) into the hinge of both wings.

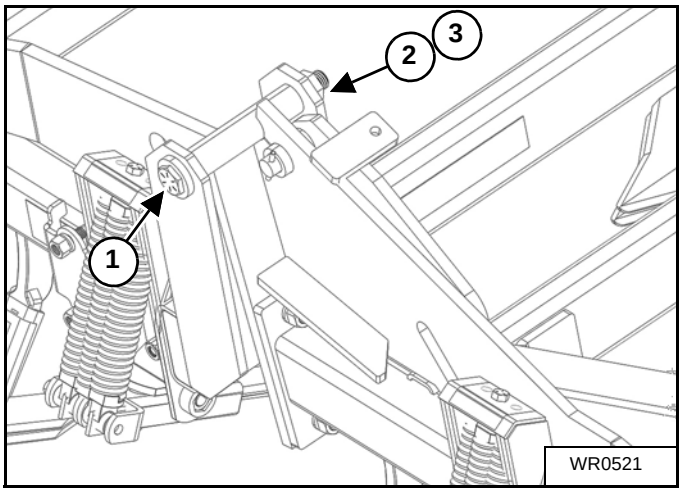

Outer Wing Assembly (Cont'd)

STEP 48

Install the 221188 5 section wing links (1) on either side of hinge (2), use a 221692 4-1/4 inch pin (3) and a 89011 3/8 x 2 inch grade 5 bolt and nut (4).

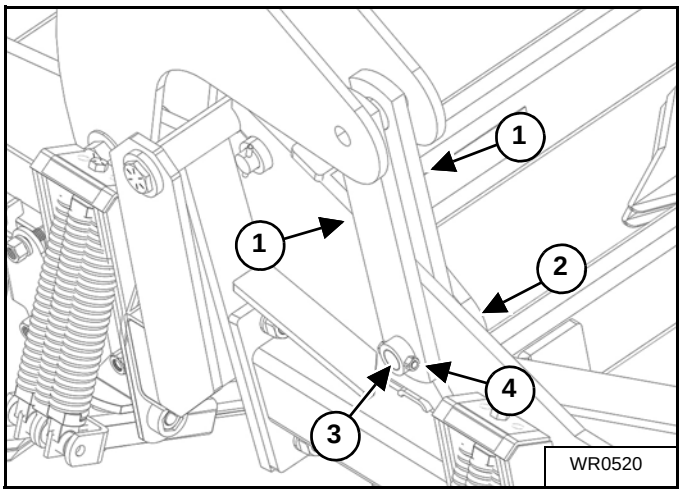

STEP 49

Use a 88264 1 x 6 inch grade 5 bolt (1), two 88196 flat washers and a 89075 nylon locknut to secure the 5 section wing arm to the wing link.

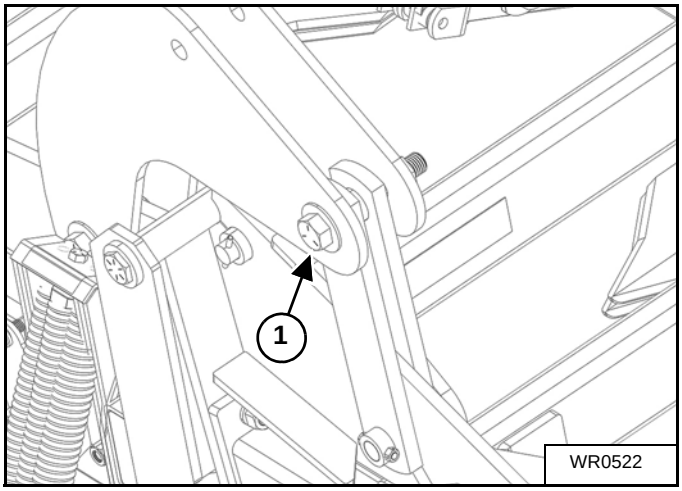

STEP 50

Use a 42473 2-3/8 inch pin (1) and 2 42484 2-1/4 inch long roll pin to install the base end of the 51229F 4 x 30 outer wing lift cylinder to the frame of the inner wing.

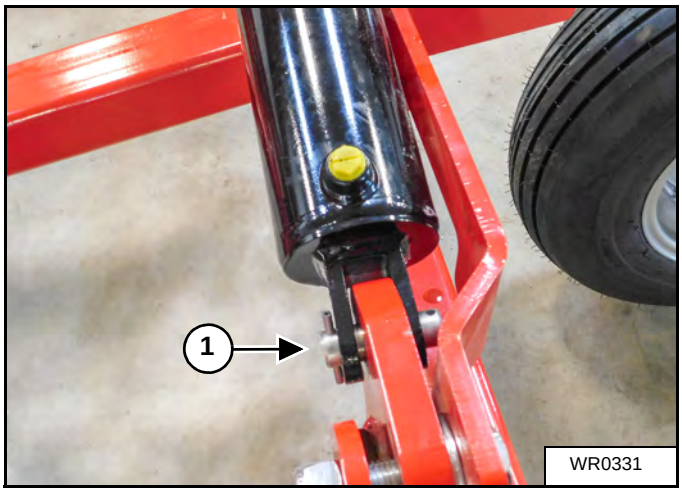

Outer Wing Assembly (Cont'd)

STEP 51

Use a 88264 1 x 6 inch grade 5 bolt (1), two 88196 flat washers and 89075 locknut to secure the yoke of the hydraulic cylinder to the 221190 section wing arms.

NOTE: The bolt must turn freely after the locknut is tightened.

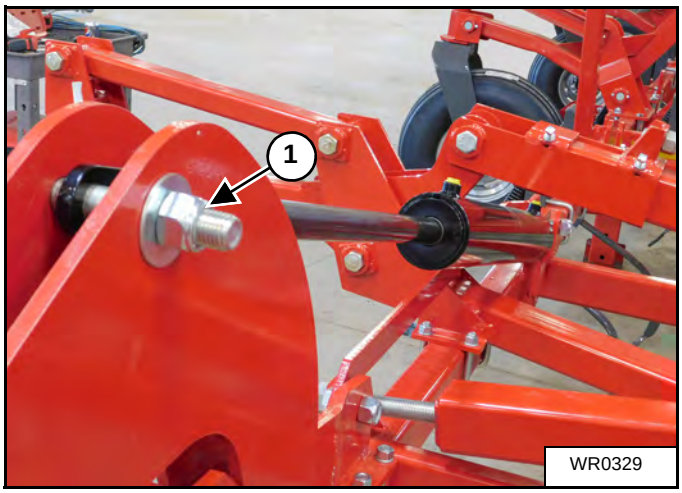

STEP 52

Follow Steps 83 through 89 for all outer wing hinge assemblies.

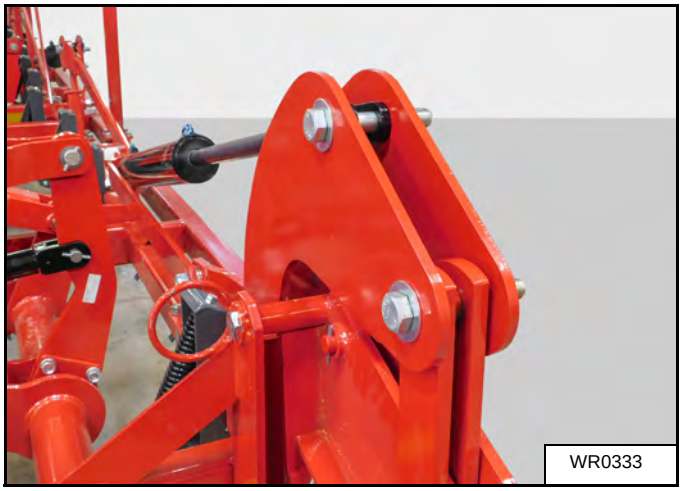

STEP 53

Using proper lifting equipment and safety measures to raise the outside of the outer wing to an approximate 25 to 30° angle.

Insert the bottom loop (1) of the 25863 spring into the bracket on the frame.

Use a pry bar, as shown, to extend the spring towards the bracket (2) on the hinge latch.

NOTE: Before installing the spring be sure there is enough clearance between the hook and body of the spring to allow installation on the bracket (2).

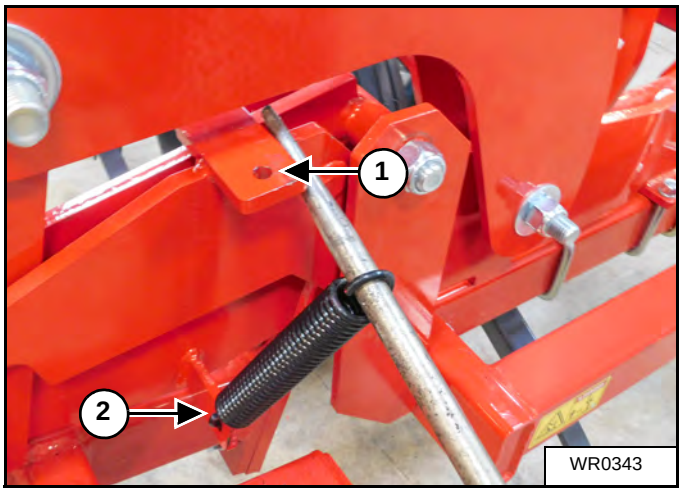

Outer Wing Assembly (Cont'd)

STEP 54

Hook the spring on the edge of the bracket (1) and remove the pry bar.

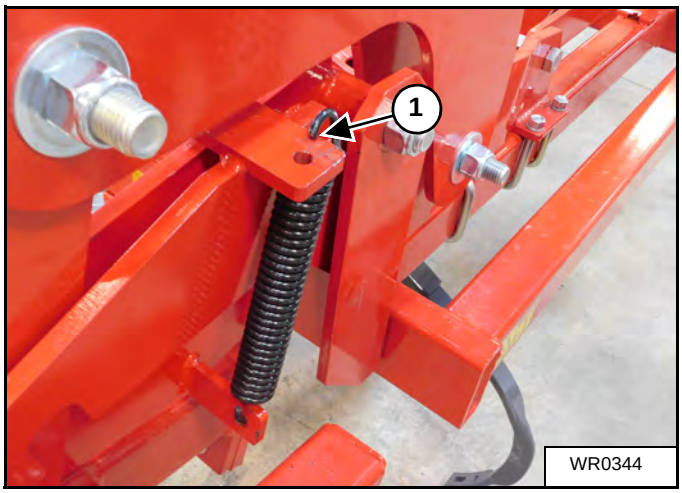

STEP 55

Carefully tap the spring until it slides into the bracket hole (1).

Follow Steps 80 through 82 on all outer wing hinges.

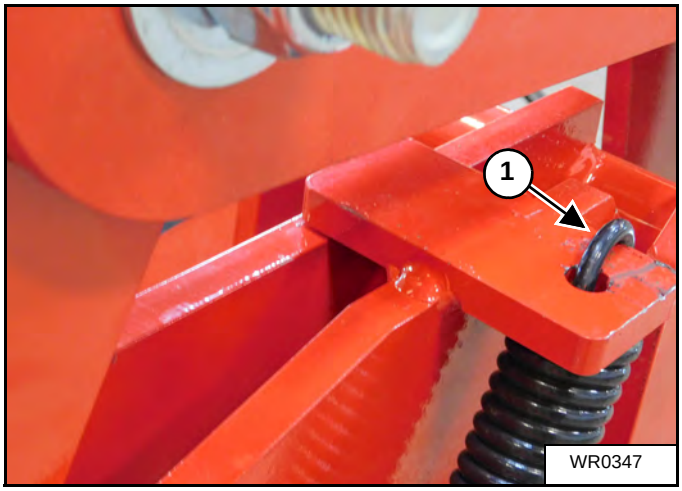

Outer Wing Parallel Link Gauge Wheel Assembly

Parallel Link Gauge Wheel

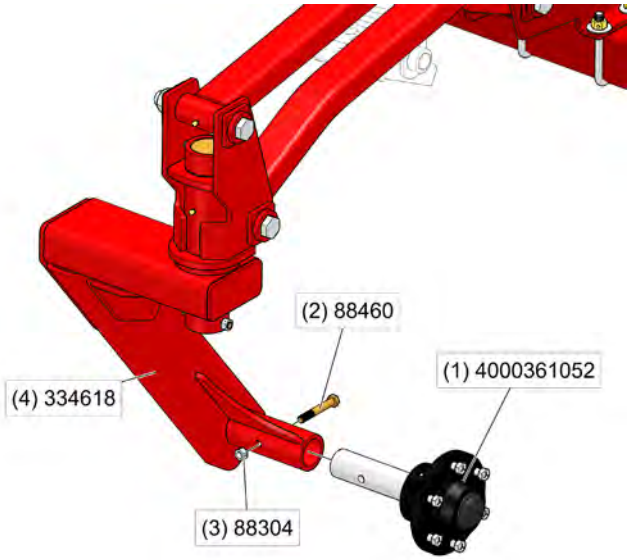

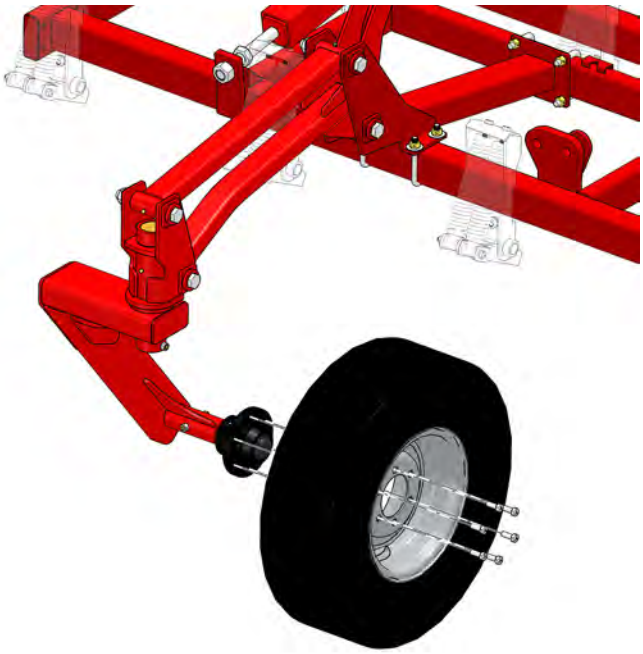

Outer Wing Parallel Link Gauge Wheel Assembly (Cont'd)

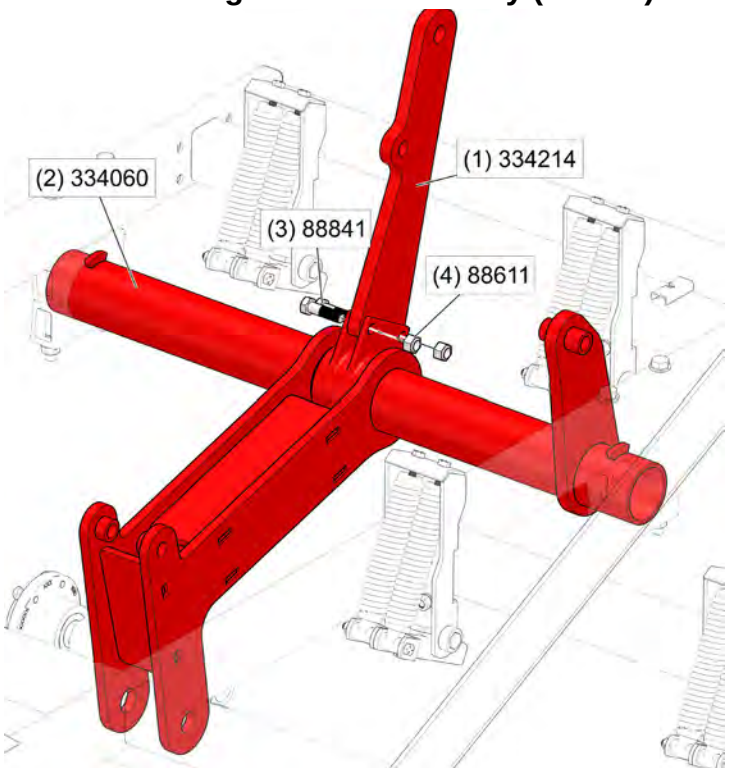

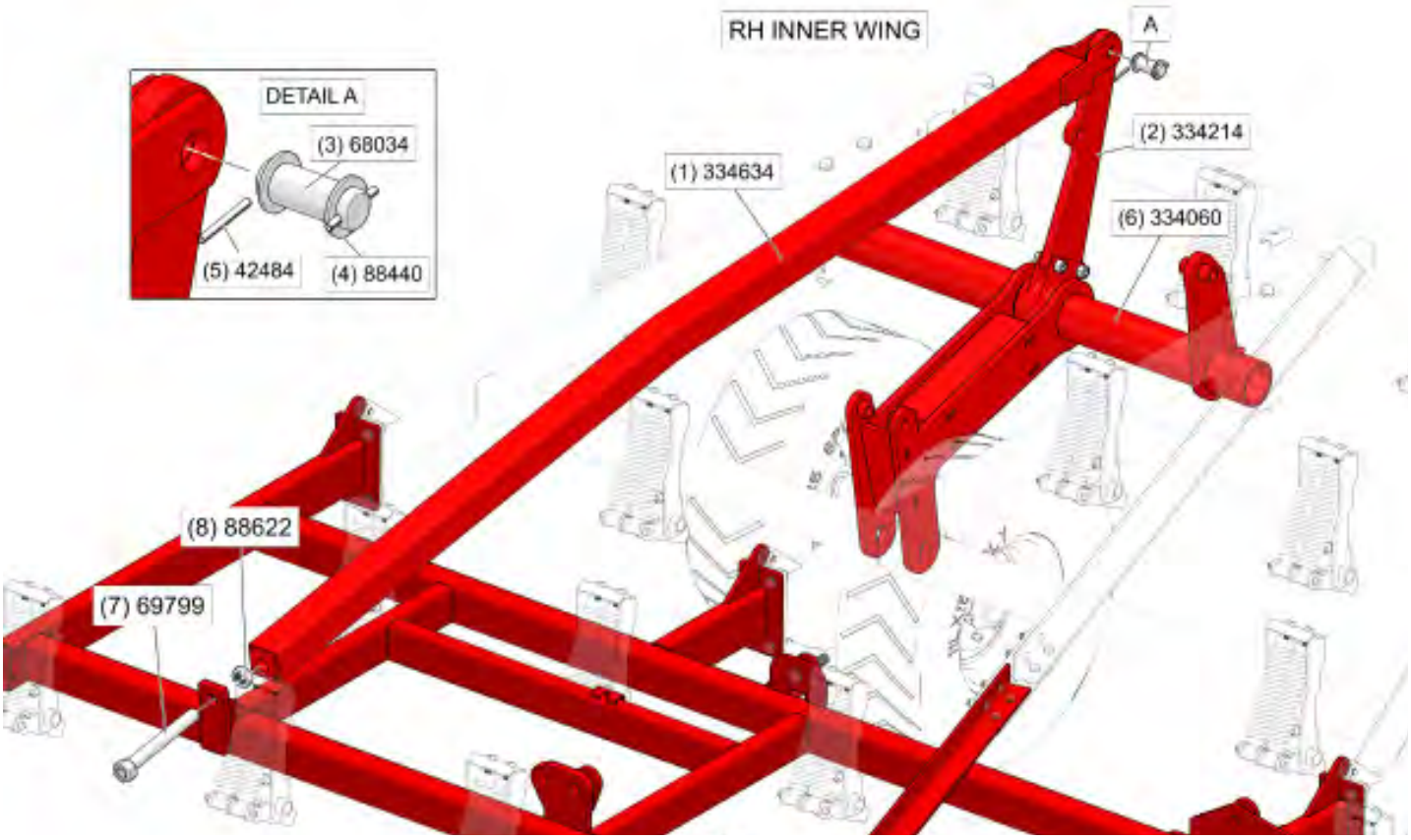

Figure 1

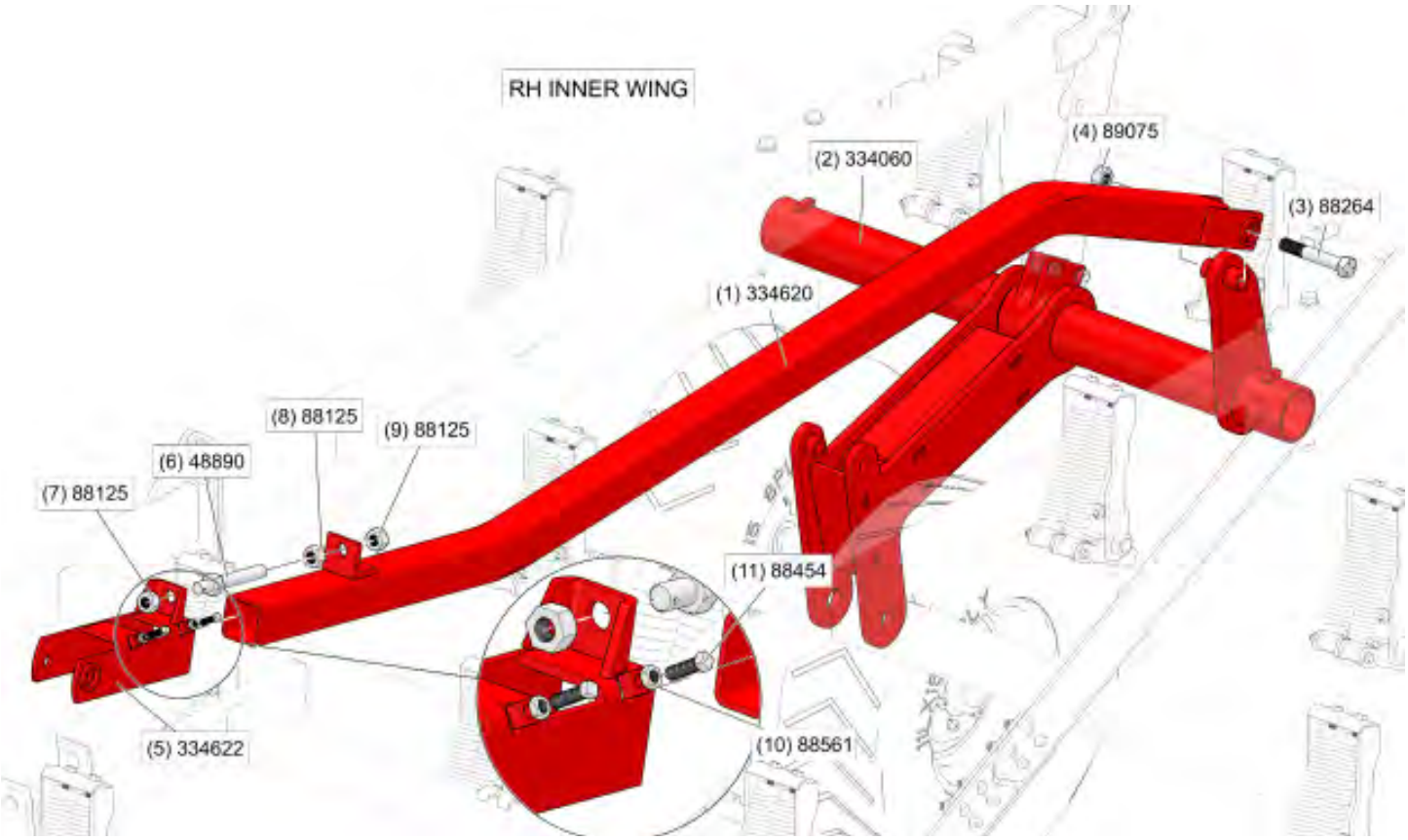

Please refer to Maintenance for torque

Outer Wing Parallel Link Gauge Wheel Assembly (Cont'd)

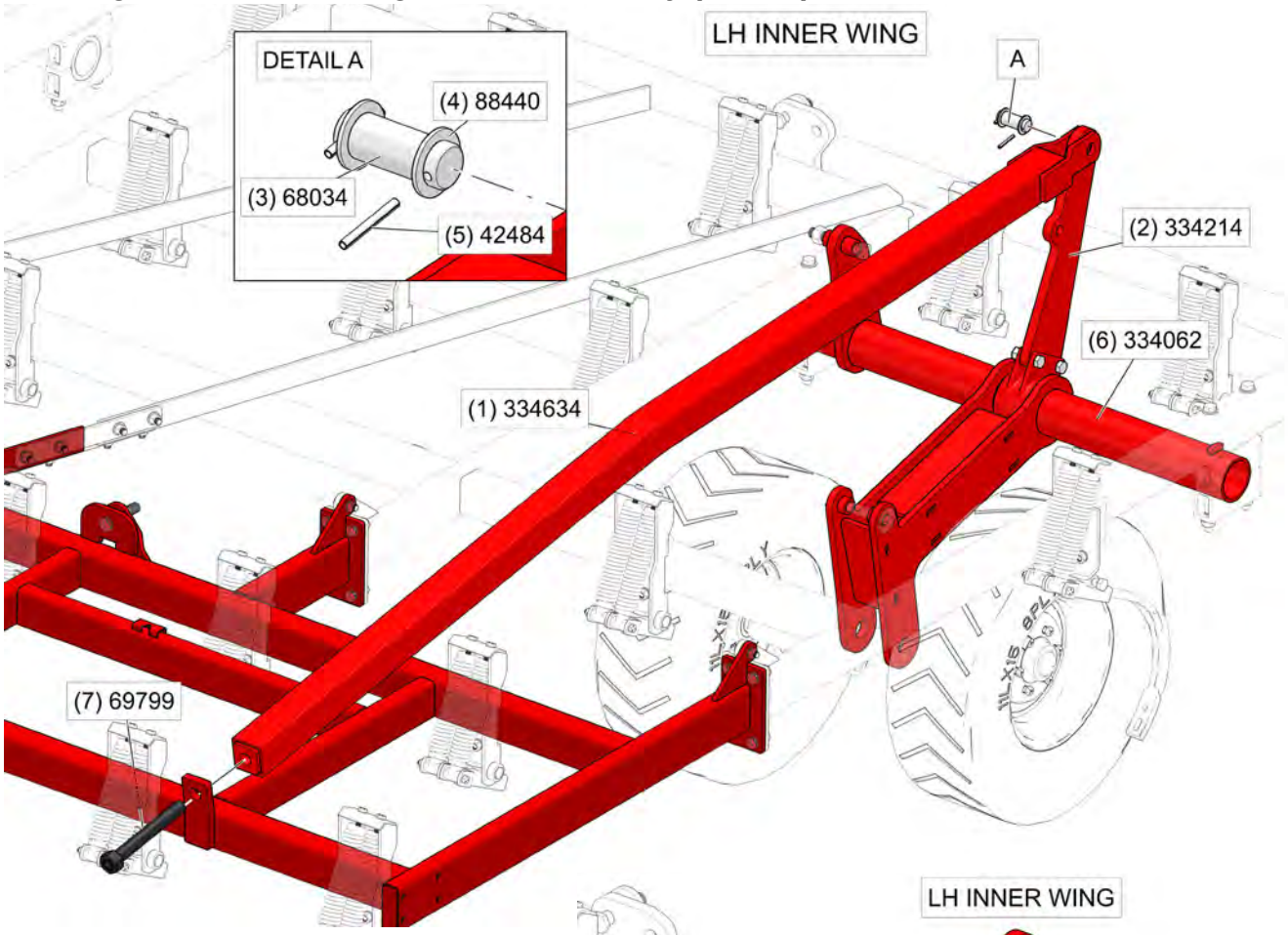

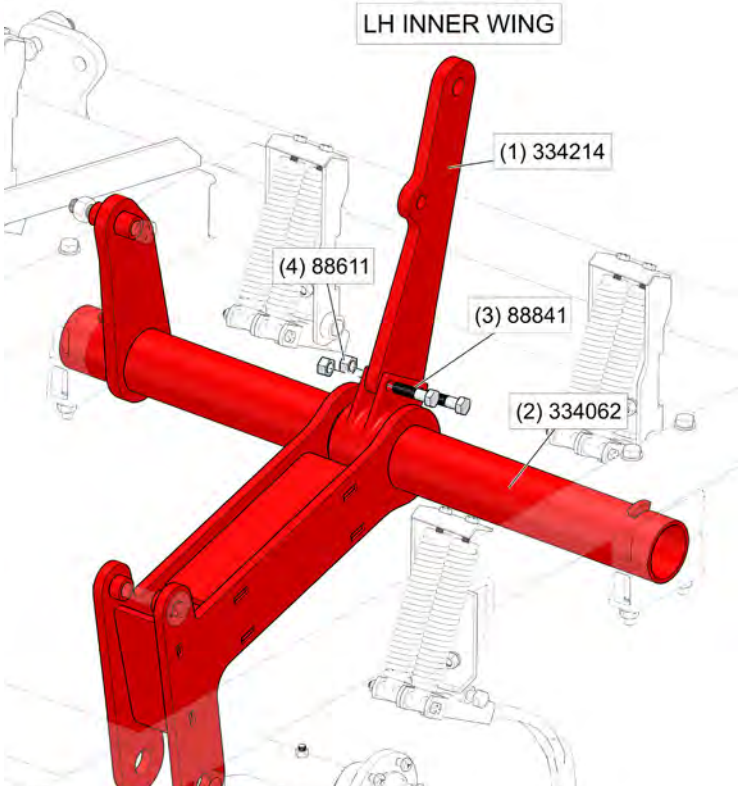

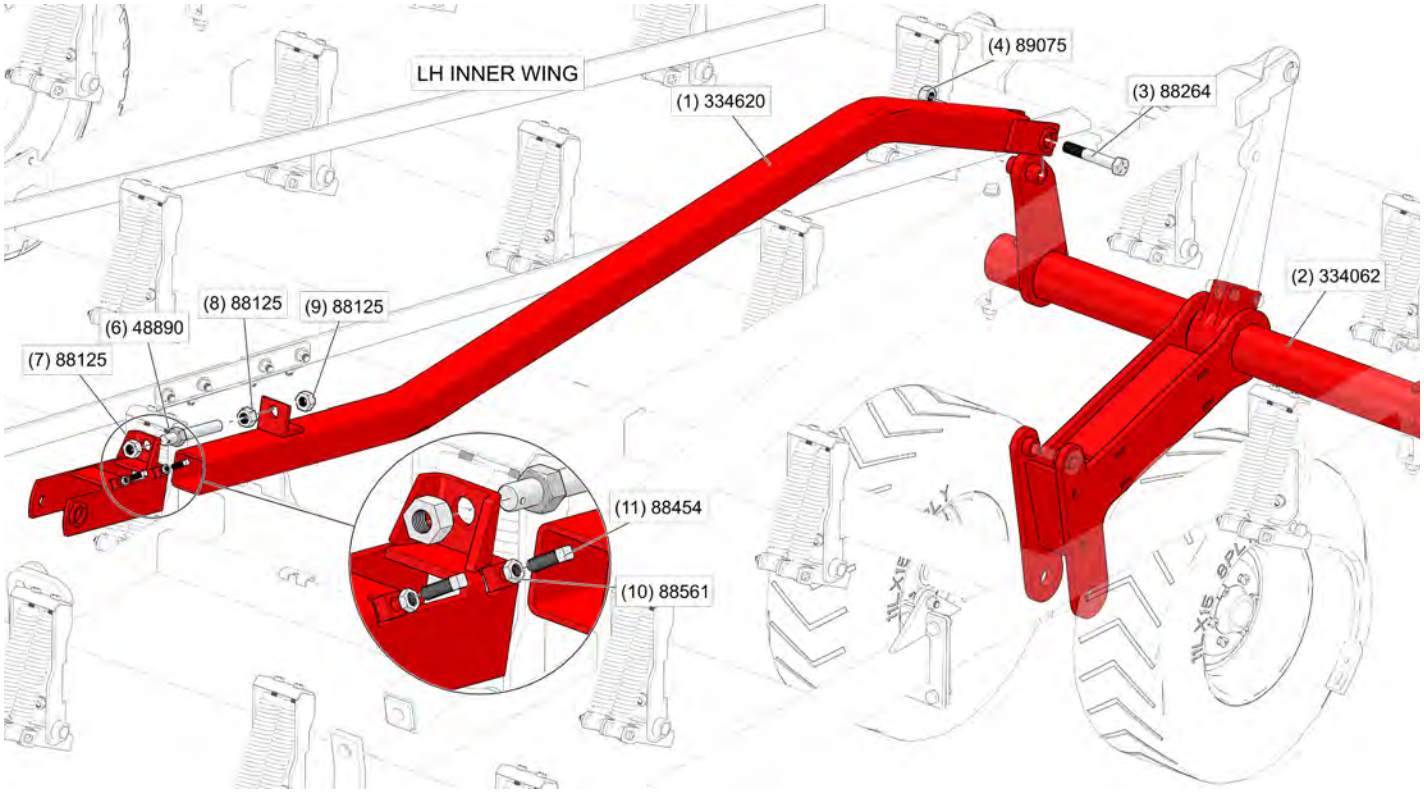

Please refer to Maintenance for torque

5 SECTION CULTIVATOR

Outer Wing Stub Assembly

Stub Locations

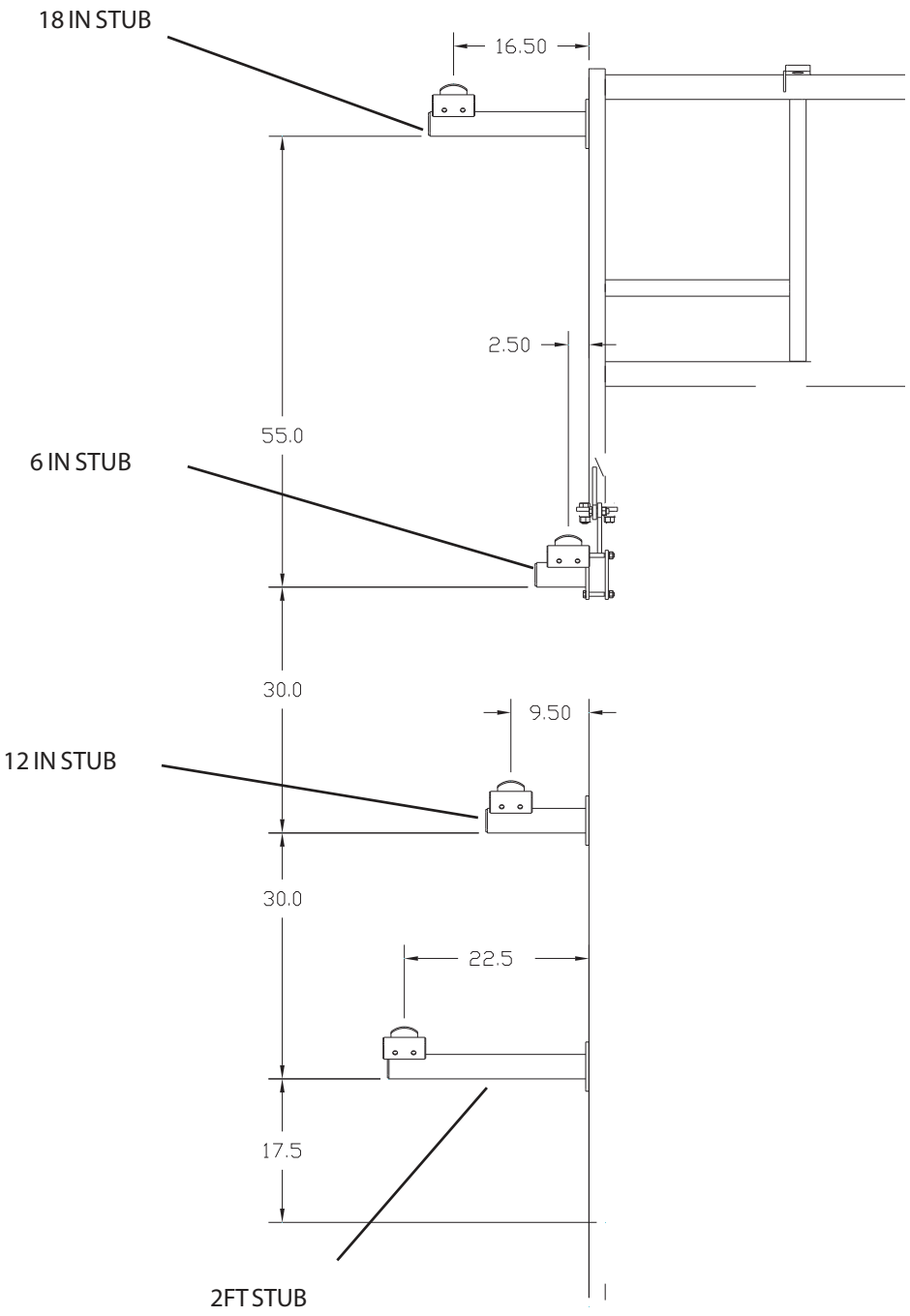

WR0561

Please refer to Maintenance for torque

Outer Wing Stub Assembly (Cont'd)

STEP 56

Install four long shank mounting stubs (1) according to the diagram for stub locations.

Use four 88307 1/2 x 3-1/2 inch grade 5 bolts, four 88303 lock washers and four 88104 nuts to secure each stub to the outside of the outer frame using the flange bracket on the inside of the frame.

IMPORTANT: Be sure all bolts are positioned with the head on the tire side of the frame.

Repeat this step for the other side.

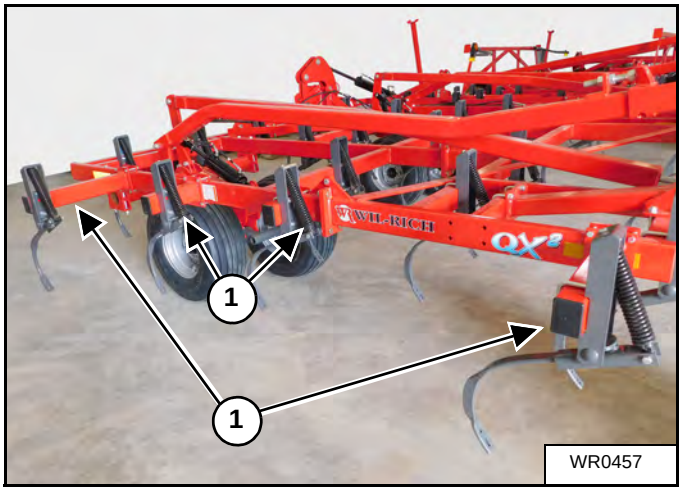

Single Point Depth Control

Single Point Depth Control

ASSY HDWR
74302-9

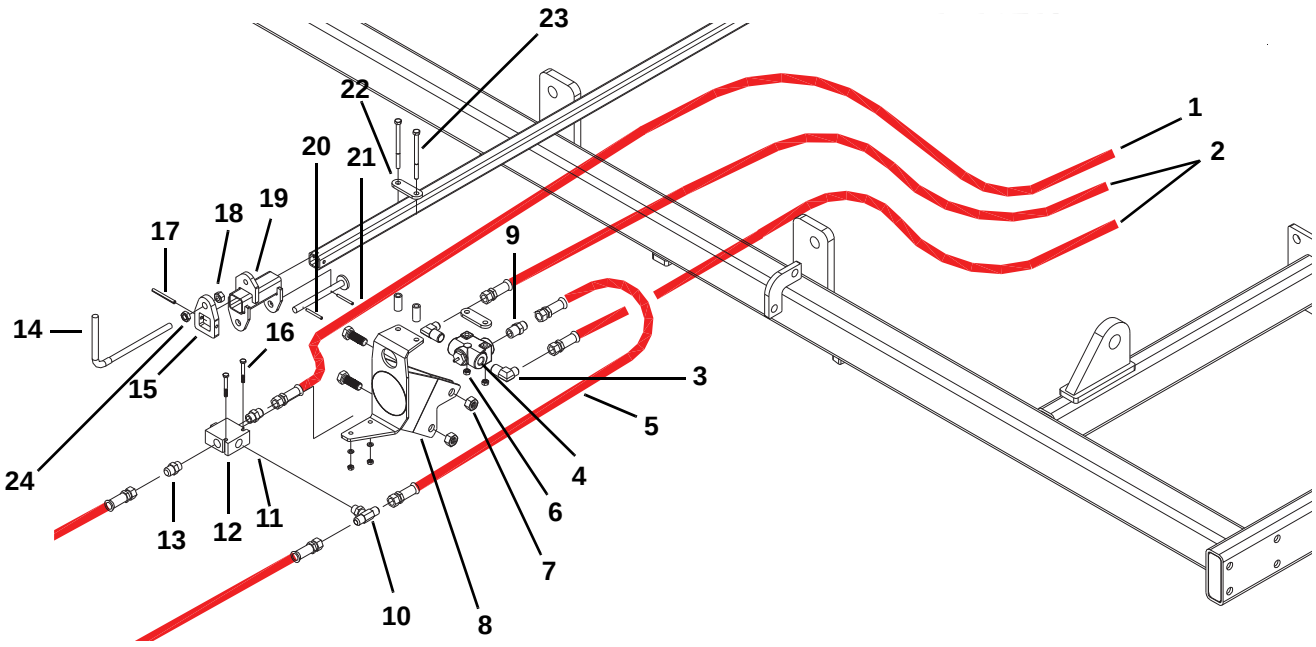

* This single point assembly circuled is used on all 5 section models except for 60 ft.

WR0499

Single Point Depth Control (Cont'd)

STEP 57

Use two 88838 5/8 x 1-3/4 inch grade 5 bolts (1) and 88369 nylon locknuts (2) to install the 238638 single point bracket on the main frame.

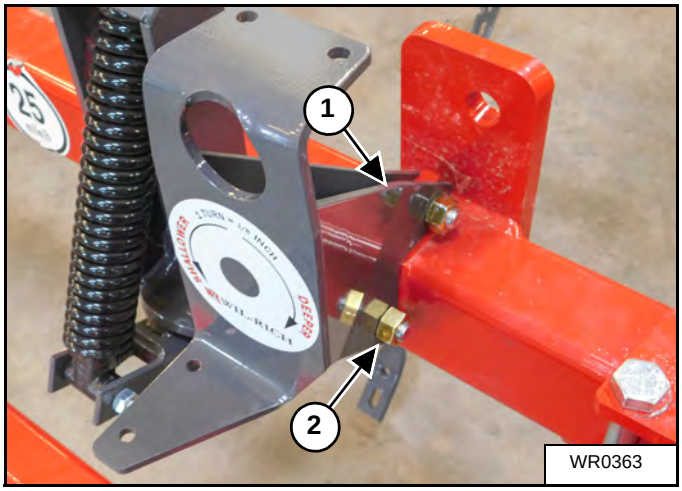

STEP 58

Use two 88812 5/16 x 4-1/2 inch grade 5 bolts (1), two 238637 spacers (2), two bushings (3) and two 88540 locknuts (4) to install the 247429 single point valve to the 238638 bracket as shown.

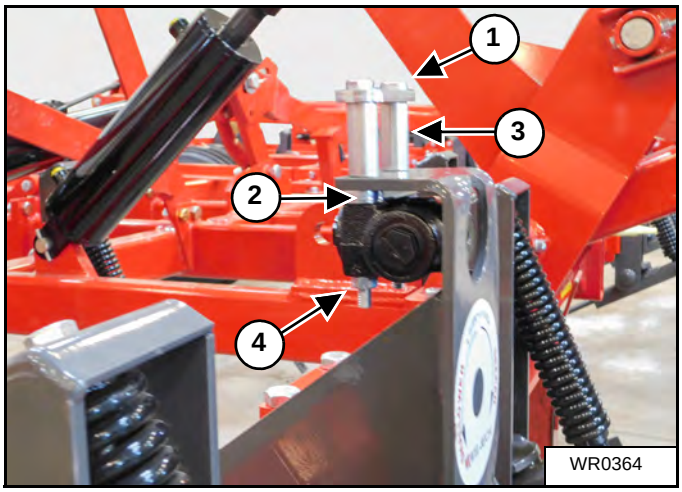

Figure 1

Single Point Depth Control (Cont'd)

STEP 59

Use two 88825 1/2 x 2 inch grade 5 bolts (1) and two 88363 locknuts (2) to install the 354613 single point tube to the axle frame.

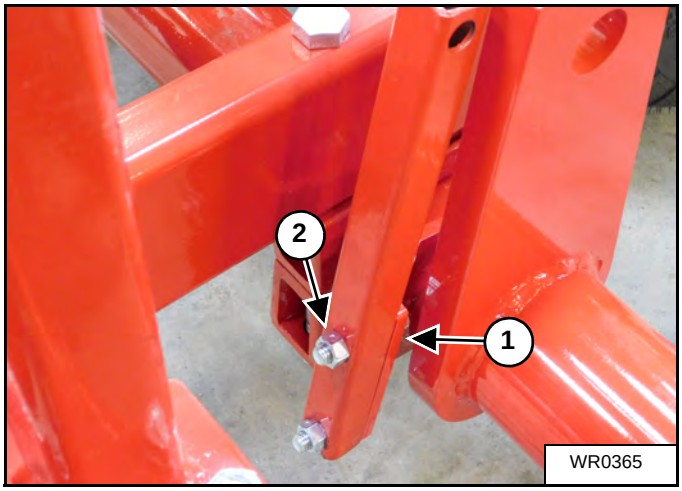

STEP 60

Use a 88295 5/8 x 6 inch grade 5 bolt (1) with a 88369 locknut to install the 354612 single point tube to the tube installed in Step 114.

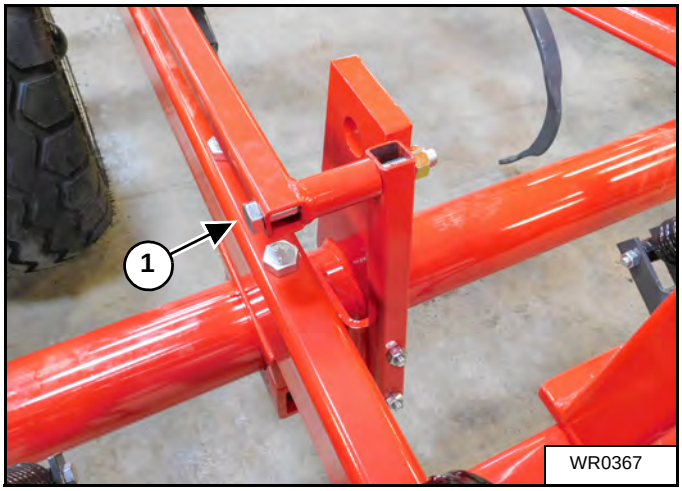

STEP 61

Insert the 222180 plunger (1) into the slide adjust securing it with two 89078 roll pins (2).

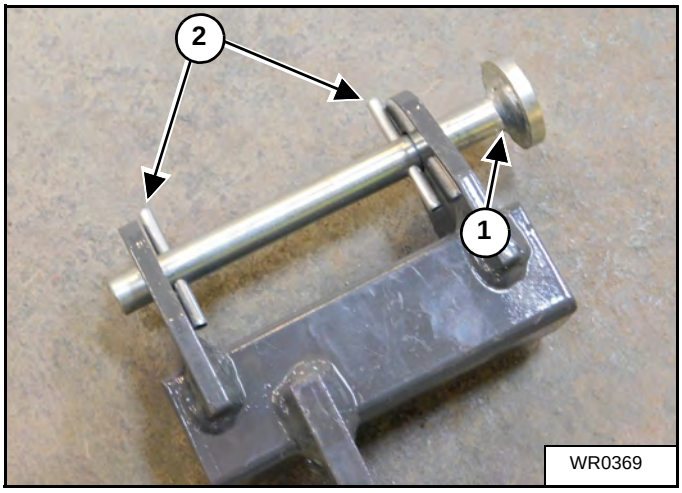

Single Point Depth Control (Cont'd)

STEP 62

Install the 241488 single point inner tube (1) through the bushings installed in Step 92.

Install the 222111 slide adjust (2) on the adjustment arm (1).

Install the adjustment bracket stop (3) on the adjustment arm with a 1/4 x 2-1/2 inch roll pin (4).

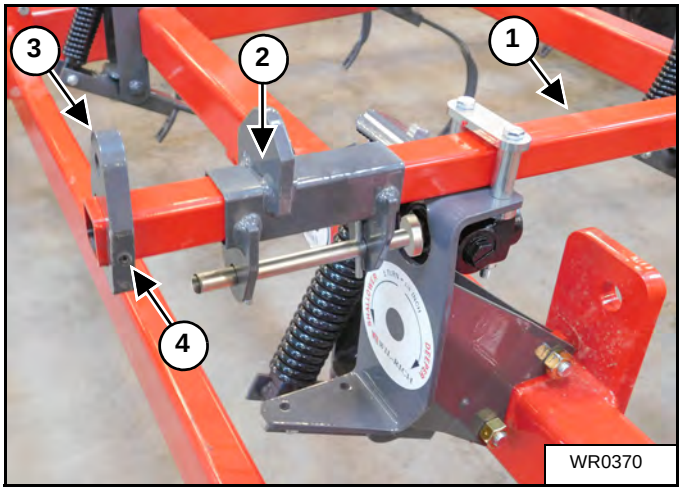

STEP 63

Screw the 222182 adjust crank (1) into the slide bracket (2) using three 88561 nuts (3) as shown.

NOTE: Bottom the nut (3) out on the threads. The two inner nuts (4) are positioned forward as shown. The handle must rotate freely when the inner nuts (4) are tightened against each other.

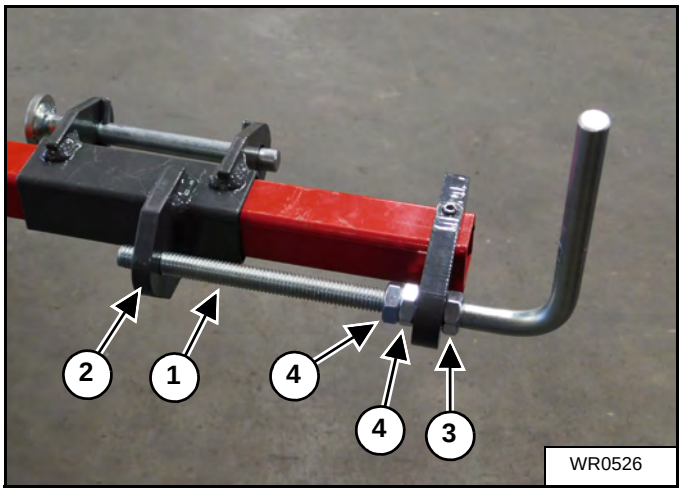

STEP 64

Use two 89058 1/4 x 2 inch bolts (1), two 88262 lock washers (2) and two 88172 nuts (3) to secure the end of the adjustment arm from Step 116 to the adjustment bar from Step 118.

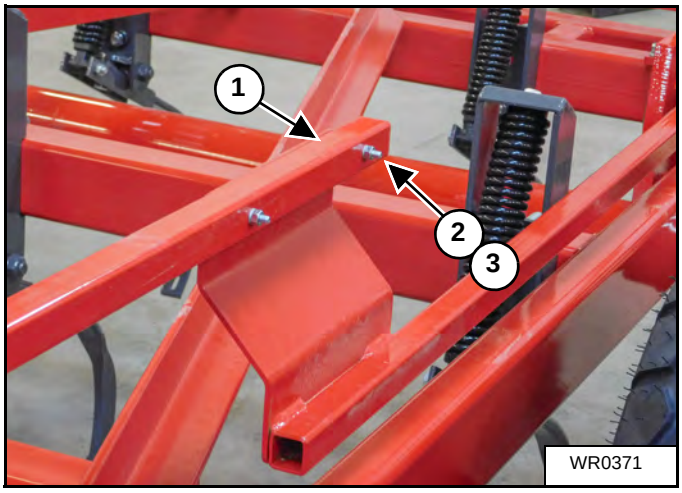

Depth Gauge Assembly

STEP 65

Use two 88514 3/8 x 4 x 3-3/4 inch U-bolts (1), four 88362 lock washers (2) and two 88103 nuts (3) to secure the 69303 depth gauge (4) to the frame.

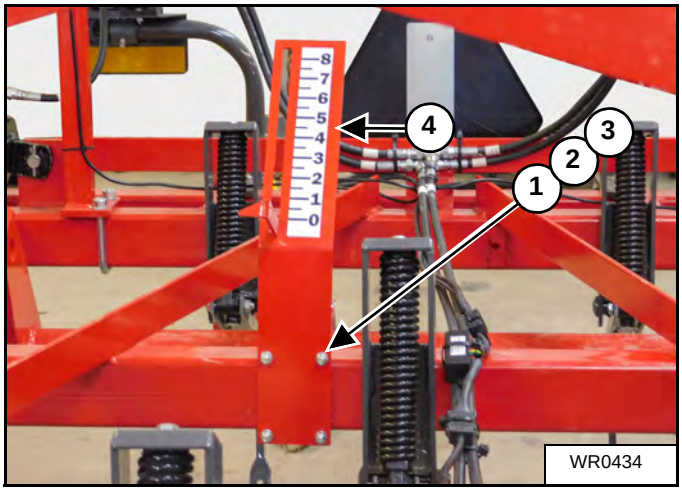

STEP 66

Install the 69309 depth indicator arm through the depth gauge slot (1).

Use a 69314 4-1/2 inch exhaust clamp (2), two flange nuts (3), a 88566 3/8 x 3/4 grade 5 bolt (4), a 88162 nylon locknut and bracket (5) to install the depth indicator arm to the axle as shown.

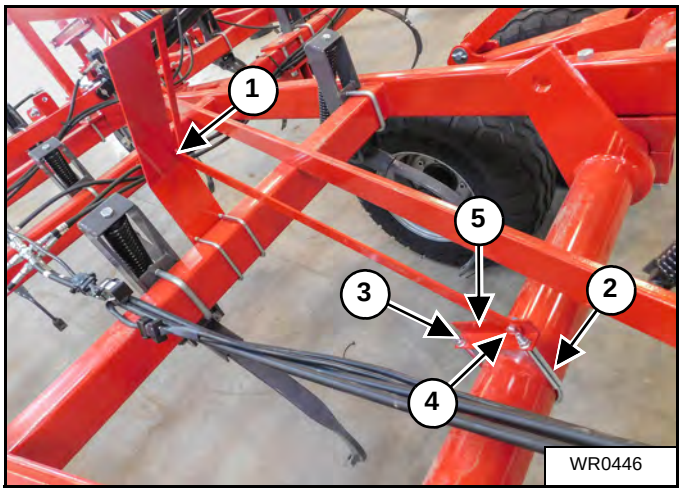

Hydraulic Weight Balance Assembly

Hyd-Weight Balance Kit

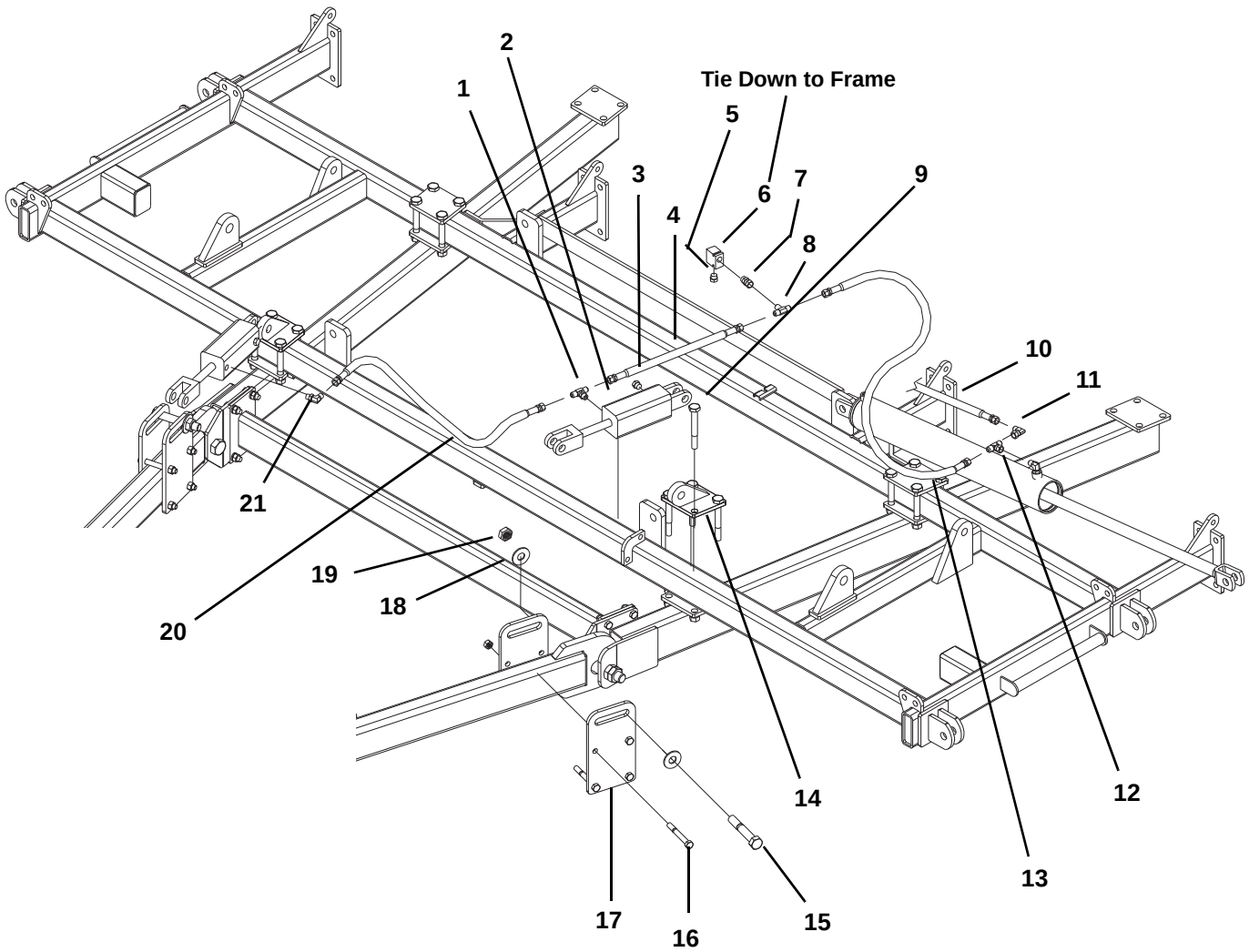

Operation: When the wings are folded the 2-1/2 x 8 cylinders will retract. This will bring weight forward on to the front caster wheels, providing stability during transport. When the unit is unfolded the pressure is relieved from the 2-1/2 x 8 cylinder allowing the hitch to float for field duties. The relief valve provides protection from extreme loads. The relief valve may drip oil in extreme cases.

WR0498

Hydraulic Weight Balance Assembly (Cont'd)

STEP 67

Use four 88395 5/8 x 5 inch grade 5 bolts (1) and 88369 locknuts (2), to install a 247421 cylinder lift plate on either side of the hitch.

IMPORTANT: Slide all the way up against the weld (3) before tightening.

The top rear bolt must be against the weld (3) on the hitch frame.

NOTE: The bolts must be installed as shown with the head towards the outside of the hitch.

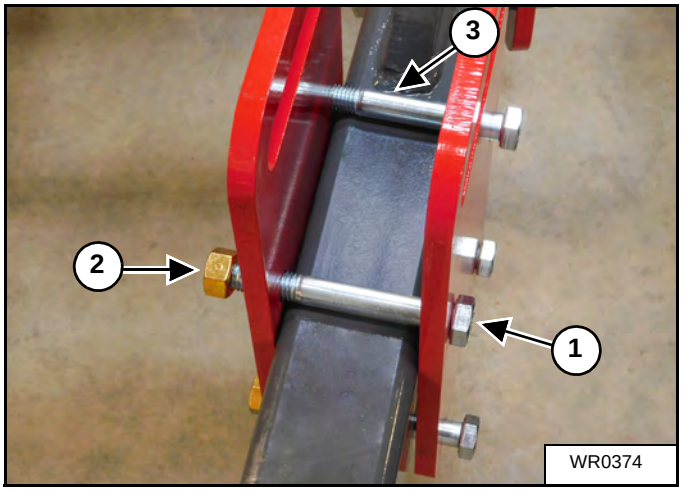

WR0374

STEP 68

Repeat Step 123 on the other side (1) of the hitch frame.

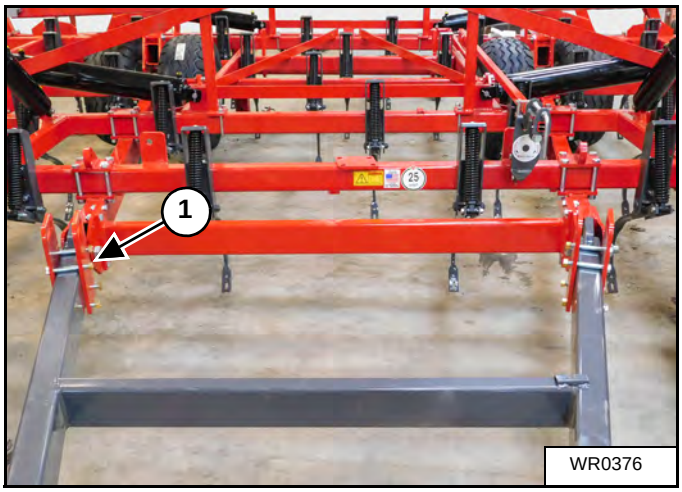

WR0376

STEP 69

Use the supplied pin and cotter keys to install the base of the 223324 2-1/2 x 4 inch cylinder to the anchor.

IMPORTANT: Install the cylinders with the ports (2) facing up.

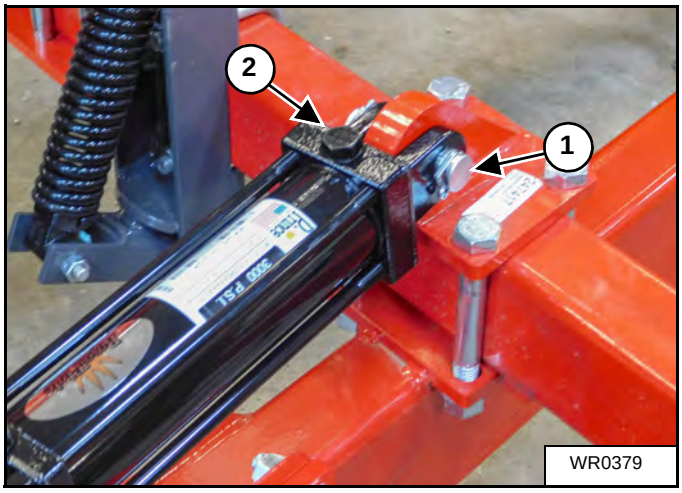

WR0379

Hydraulic Weight Balance Assembly (Cont'd)

STEP 70

Use a 88264 1 x 6 inch grade 5 bolt (1), two 88196 flat washers (2) and a 88348 locknut (3) to install the rod end of the hitch cylinder on the plates installed in Step 102.

Repeat Steps 125 and 126 for the other side of the hitch.

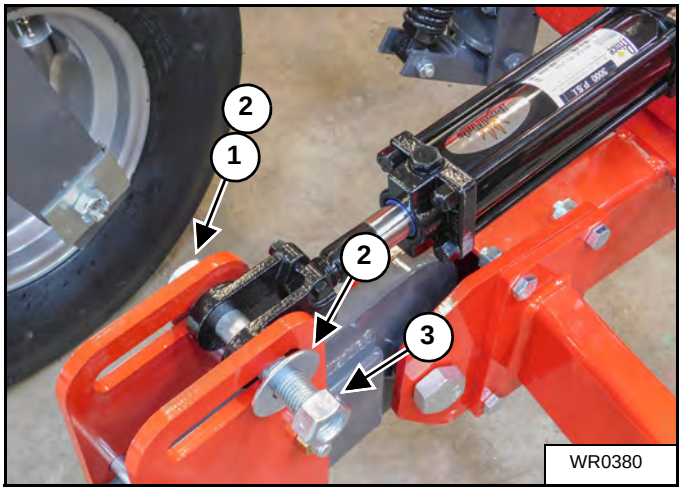

WR0380

Safety Light Assembly

STEP 71

Use a 89347 1/2 x 3-1/4 inch U-bolt (1), two 88362 lock washers (2) and 88103 two nuts (3) to install the 223130 short base pivot to the frame (4).

Insert 223140 12 x 12 inch light arm into the short base pivot (5). Install a 88702 square head set screw and 88103 3/8 nut to secure the light arm.

NOTE: Any attachments to the rear tool bars must be installed before the safety lights can be installed.

NOTE: Each 223130 short base pivot must be a minimum of 15 inches (38.1 cm) from the center of the frame to a maximum of 50 inches (127 cm).

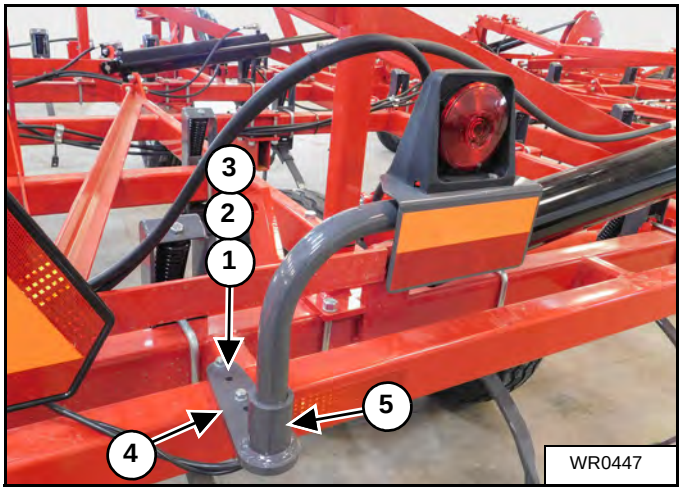

WR0447

Safety Light Assembly (Cont'd)

STEP 72

Secure the 223126 light / reflector bracket to the offset light arm with a 88702 3/8 x 3/4 inch square head set screw (1) and 88103 nut.

Use two 88203 1/4 x 1 grade 5 inch bolts (2) and two 88172 nuts to secure the red light to 223126 light / reflector bracket.

NOTE: Be sure to route wiring inside the offset light arm.

Repeat Steps 127 and 128 for the opposite side light.

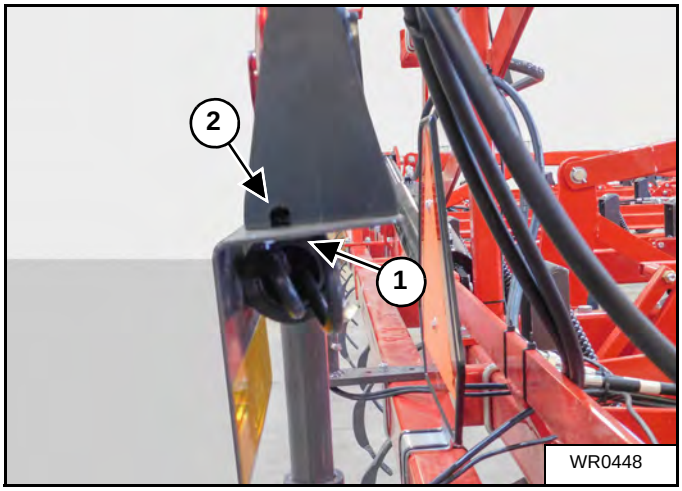

WR0448

STEP 73

Use two zip ties to secure the 41359 reflector bracket (1) to the wing rest.

Secure the 30651 SMV reflector to the bracket with two 88993 1/4 x 3/4 grade 5 bolts (2), two 88261 flat washers, two 88262 lock washers and two 88172 nuts.

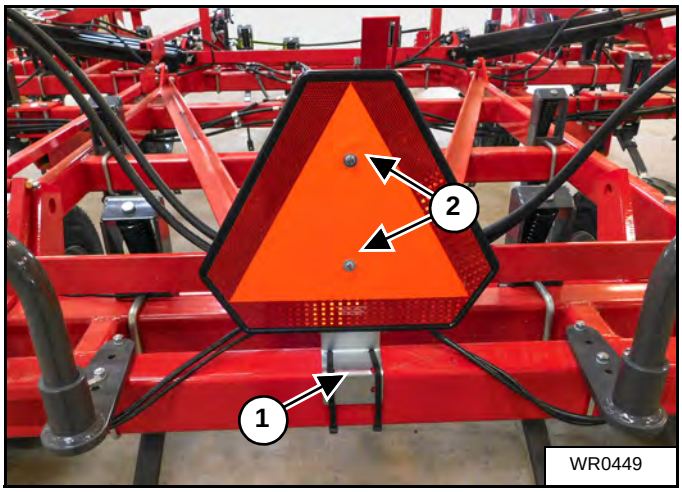

WR0449

Safety Light Assembly (Cont'd)

NOTE: Be sure to secure both lights offset arms inside the frame crossmember a minimum of 15 and a maximum of 50 inches (76 to 254 cm) from the center of the rear frame with the reflector (2) centered between the two arms (1).

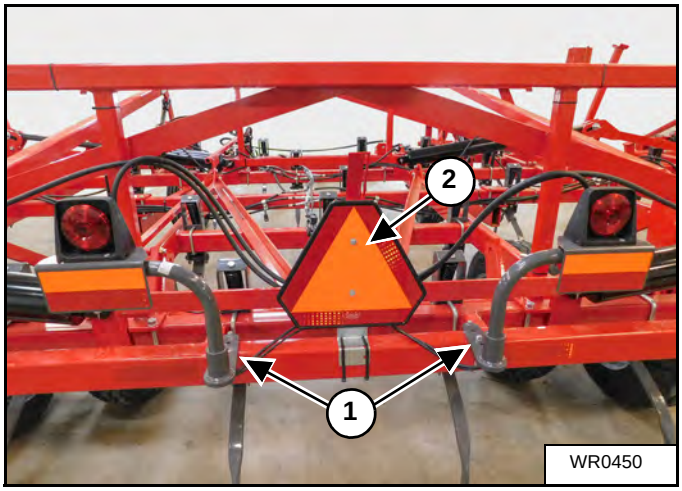

STEP 74

Use two 88386 3/8 x 2-1/2 x 3-1/4 inch U-bolts (1) and four 88162 locknuts to secure the 240237 pivot plate to the upper crossmember of the rear wing rest.

Use a 88702 3/8 x 3/4 square head set screw (2) to secure the 223121 48 inch offset light arm to the pivot plate in the bottom hole.

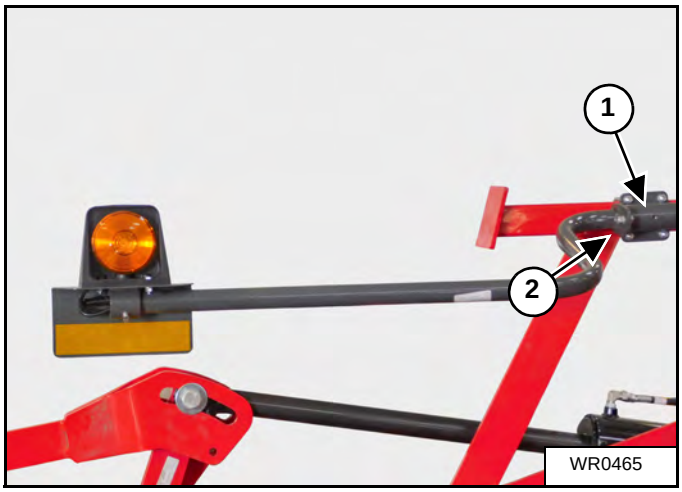

STEP 75

Secure the light / reflector bracket to the offset light arm with a 88702 3/8 x 3/4 square head set screw (1) and 88103 nut.

Use two 88203 1/4 x 1 inch grade 5 bolts (2) and two 88172 nuts to secure the 223143 amber light to the 223126 light / reflector bracket.

NOTE: Be sure to route wiring inside the offset light arm.

Repeat Steps 130 and 131 for the other side light.

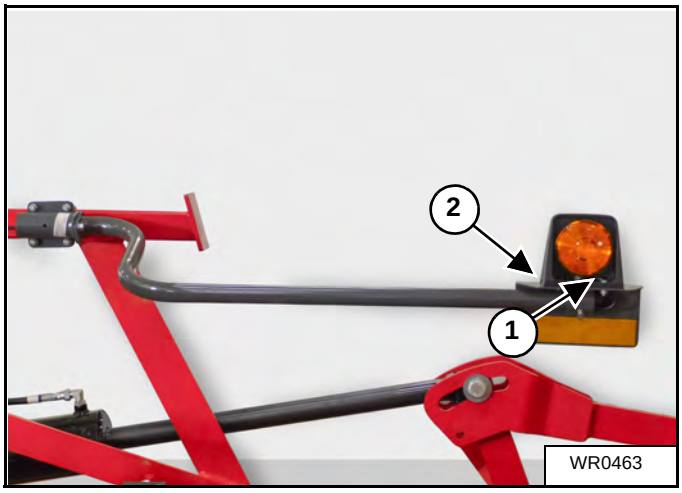

Safety Light Assembly (Cont'd)

STEP 76

Route the wiring (1) for the 223143 amber lights along the rear wing rest as shown and secure to the wing rest with tie wraps (2) as needed to maintain a clean straight line.

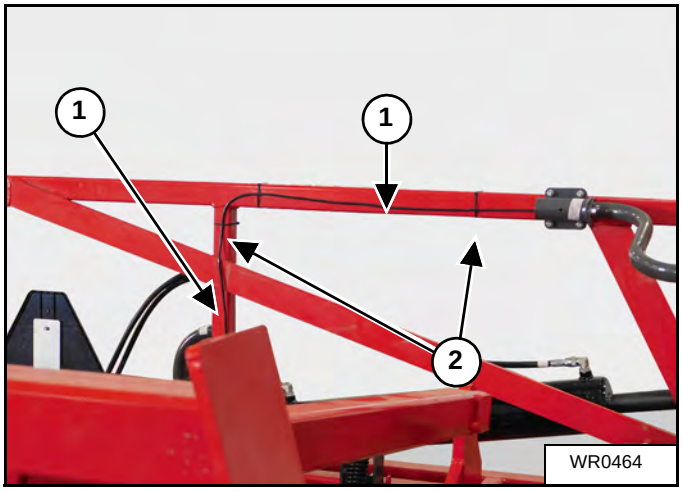

STEP 77

Route the wires from the 223143 amber safety lights to the center (1) of the main frame where the hydraulic lines and 223144 red safety light wiring intersect.

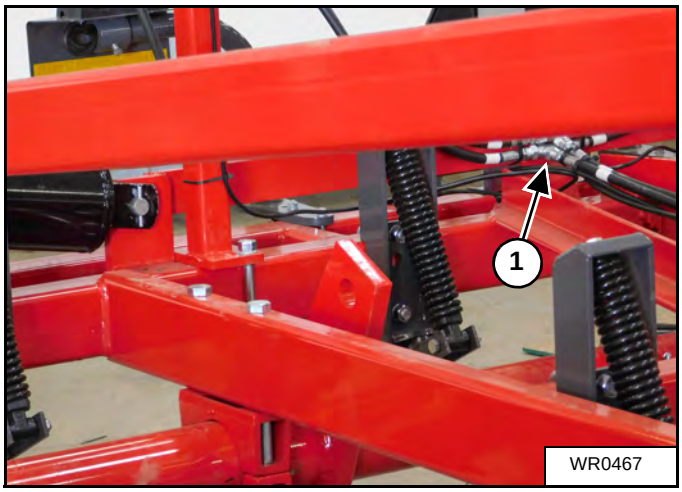

Hydraulic Assembly

Hydraulic Component Assembly

All Wil-Rich lift systems should be assembled as noted in the appropriate assembly manual. For best functional results the following steps should be followed.

1. Position the main lift cylinders in the locations and connect the hydraulic circuitry as shown. Attach the base end of all cylinders but do not connect the rod ends. Support the cylinders to allow the rods to extend without machine contact.

2. Most fittings, except the connection tips at the tractor end and some valves, are JIC or O-ring type fitting. JIC or O-ring fitting do not require any type of thread compound to seal properly. **NOTE: Take care to keep all connections, fitting, hose, etc as clean as possible.**

3. Where pipe threads are used a thread-sealing compound should be used. **NOTE: Do not use Teflon type tape on any hydraulic circuitry; use an appropriate liquid compound. If any tape or contaminate enters the system it can clog the bypass hole.**

Thread Size	Assembly Torque (in-lb)	Assembly Torque (ft-lb)	Tube Connection FFWR	Swivel Nut or Hose FFWR
2	35 – 45	2 – 4	N/A	N/A
3	65 – 75	5 – 7	N/A	N/A
4	130 – 150	11 – 13	2	2
5	165 – 195	14 – 16	2	2
6	235 – 265	20 – 22	1.5	1.25
8	525 – 575	43 – 47	1.5	1
10	650 – 750	55 – 65	1.5	1
12	950 – 1050	80 – 90	1.25	1
14	1200 – 1300	100 – 110	1	1
16	1400 – 1500	115 – 125	1	1
20	1900 – 2100	160 – 180	1	1
24	2250 – 2550	185 – 215	1	1
32	3000 – 3400	250 – 290	1	1

WR0826

5 SECTION CULTIVATOR

Hydraulic Assembly (Cont'd)

QX² 46 Fold Hydraulics

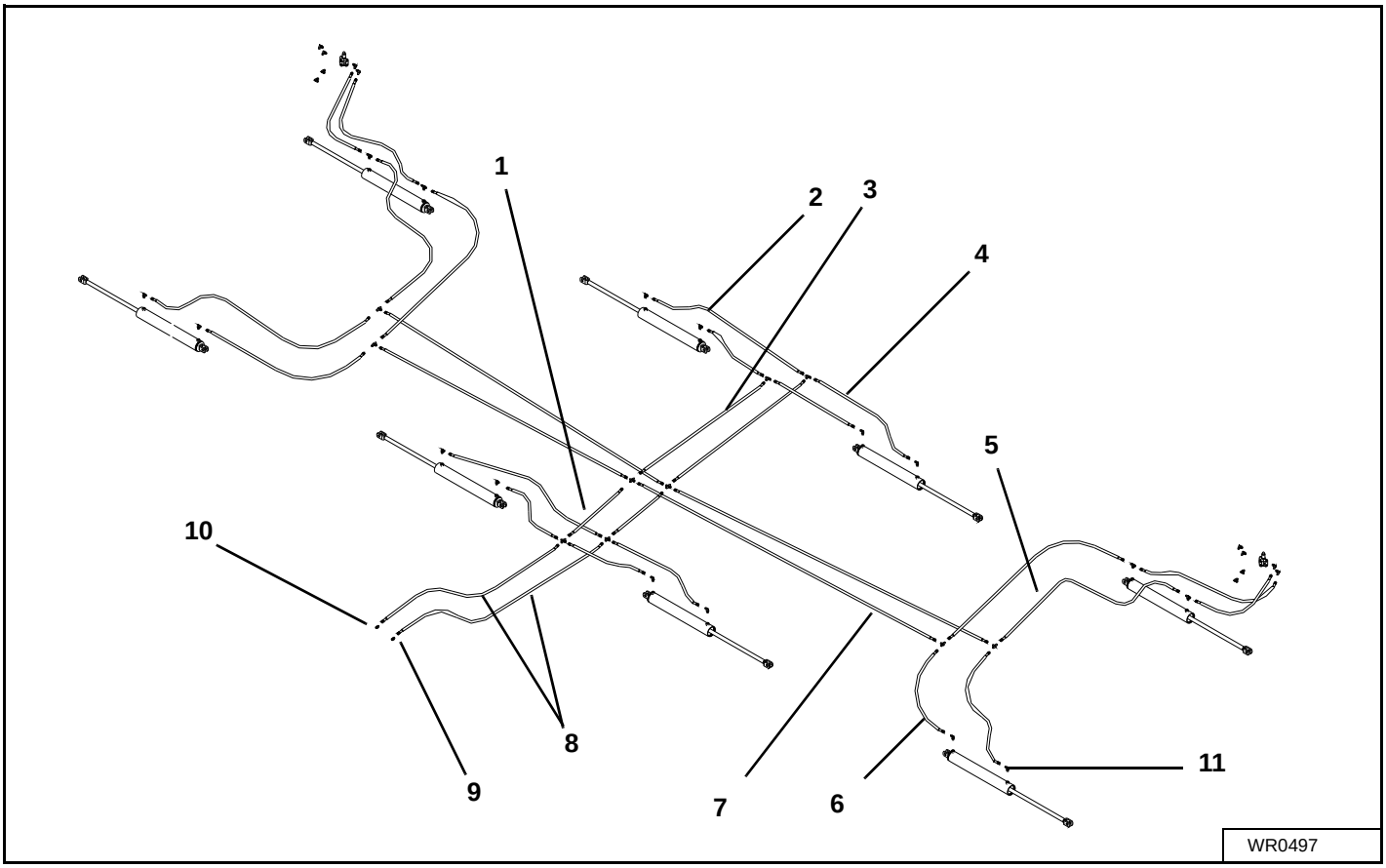

REF.	PART NO.	DESCRIPTION
1	247430	HSE, 3KPSI: 1/2 x 65 8FJX-8FJX
2	14644	HSE, 3KPSI: 3/8 x 36 8FJX-8FJX
3	25602	HSE, 3KPSI: 3/8 x 65 8FJX-8FJX
4	67636	HSE, 3KPSI: 3/8 x 72 8FJX-8FJX
5	56540	HSE, 3KPSI: 3/8 x 89 8FJX-8FJX
6	13268	HSE, 3KPSI: 3/8 x 78 8FJX-8FJX
7	13484	HSE, 3KPSI: 3/8 x 156 8FJX-8FJX
8	234940	HSE, 3KPSI: 1/2 x 216 8FJX-8FJX
9	24024	ADP 8MORB x 8MJ
10	247425	QUICK COUPLER 8 ORB
11	25580	ELB 8MORB x 8MJ

Hydraulic Assembly (Cont'd)

QX² 55 Fold Hydraulics

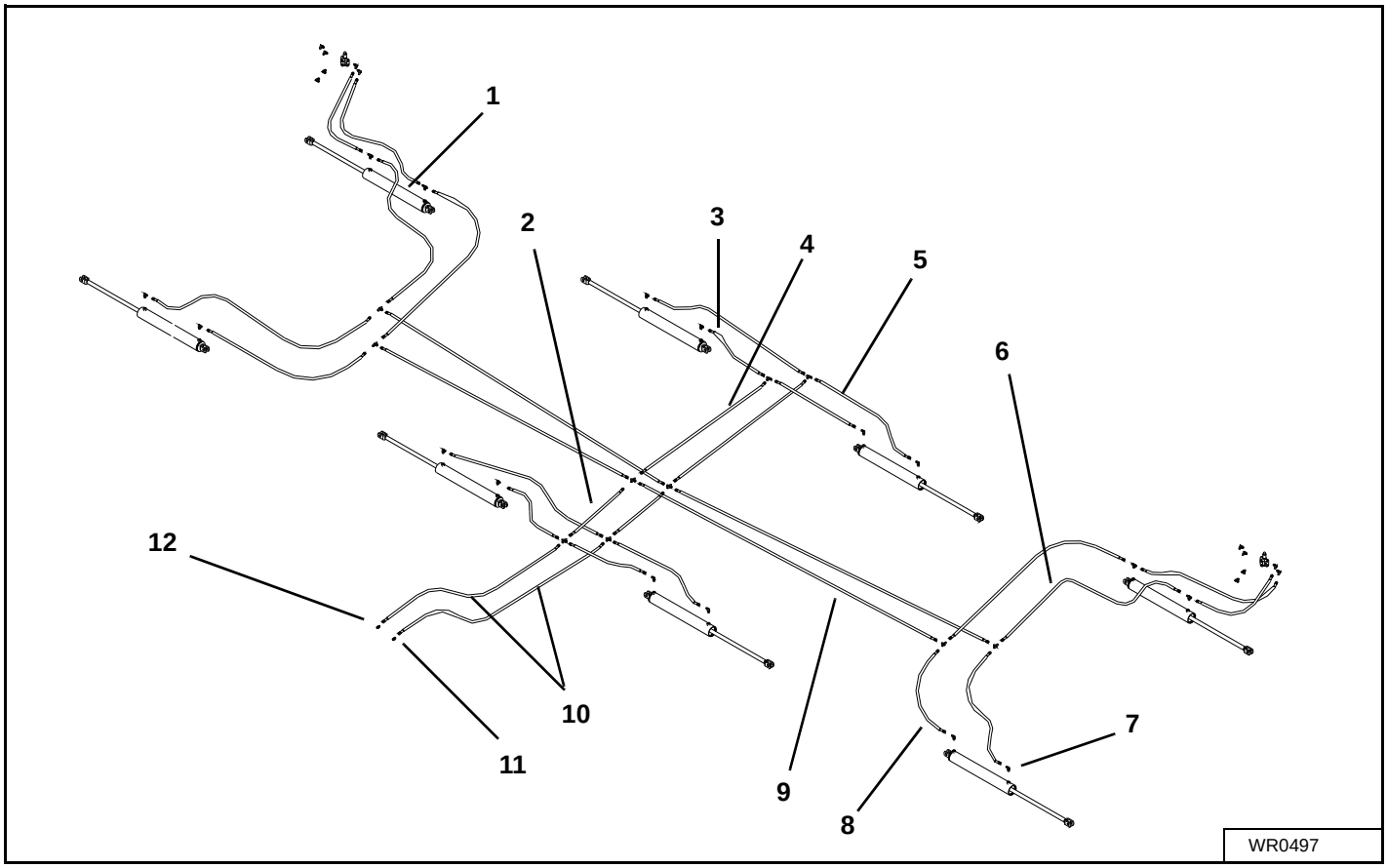

REF.	PART NO.	DESCRIPTION
1	350600	RSTR ADP 8MORB x 8FORB (.060) W/ INSERT
2	247430	HSE, 3KPSI: 1/2 x 65 8FJX-8FJX
3	247459	HSE, 3KPSI: 3/8 x 284 8FJX-8FJX
4	25602	HSE, 3KPSI: 3/8 x 65 8FJX-8FJX
5	67636	HSE, 3KPSI: 3/8 x 72 8FJX-8FJX
6	56540	HSE, 3KPSI: 3/8 x 89 8FJX-8FJX
7	25580	ELB 8MORB x 8MJ
8	13268	HSE, 3KPSI: 3/8 x 78 8FJX-8FJX
9	233689	HSE, 3KPSI: 3/8 x 180 8FJX-8FJX
10	234940	HSE, 3KPSI: 1/2 x 216 8FJX-8FJX
11	24024	ADP 8MORB x 8MJ
12	247425	QUICK COUPLER 8 ORB

Hydraulic Assembly (Cont'd)

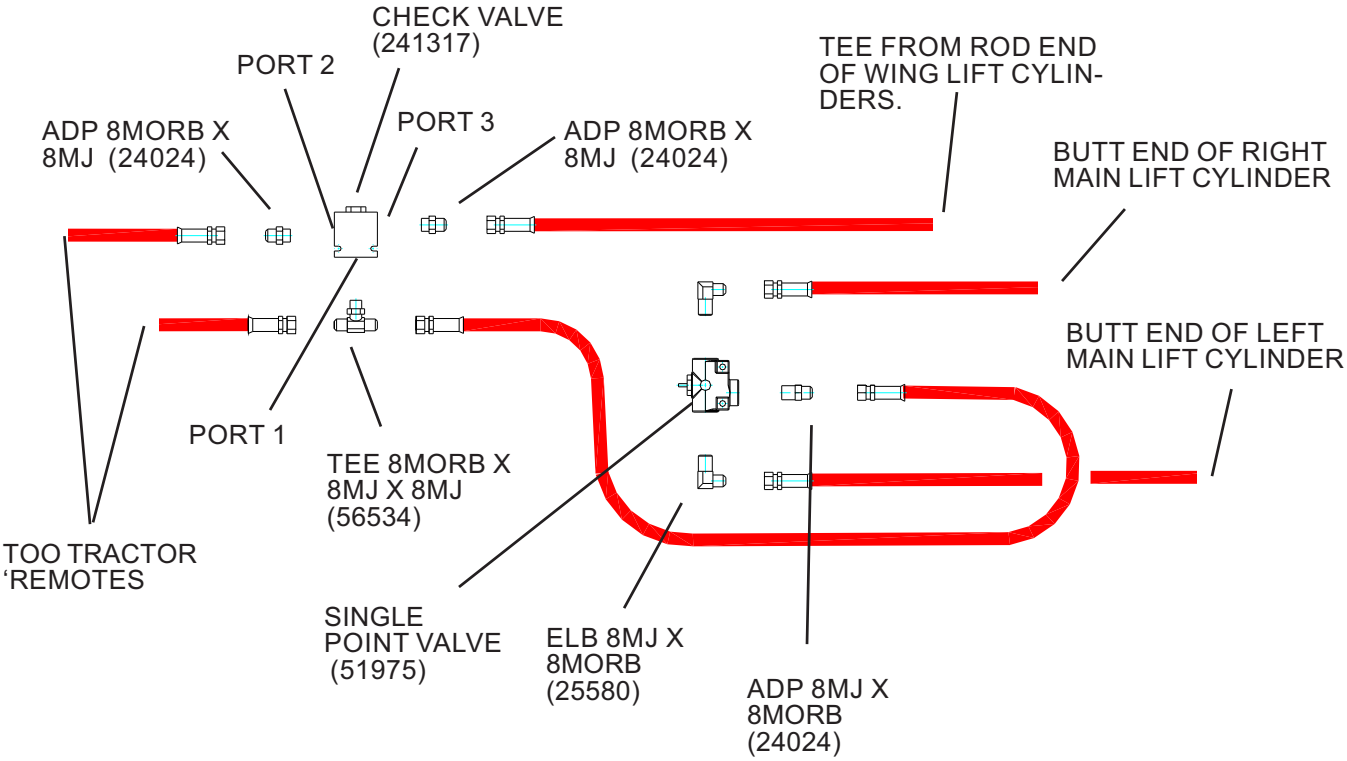

Hydraulic Assembly (Cont'd)

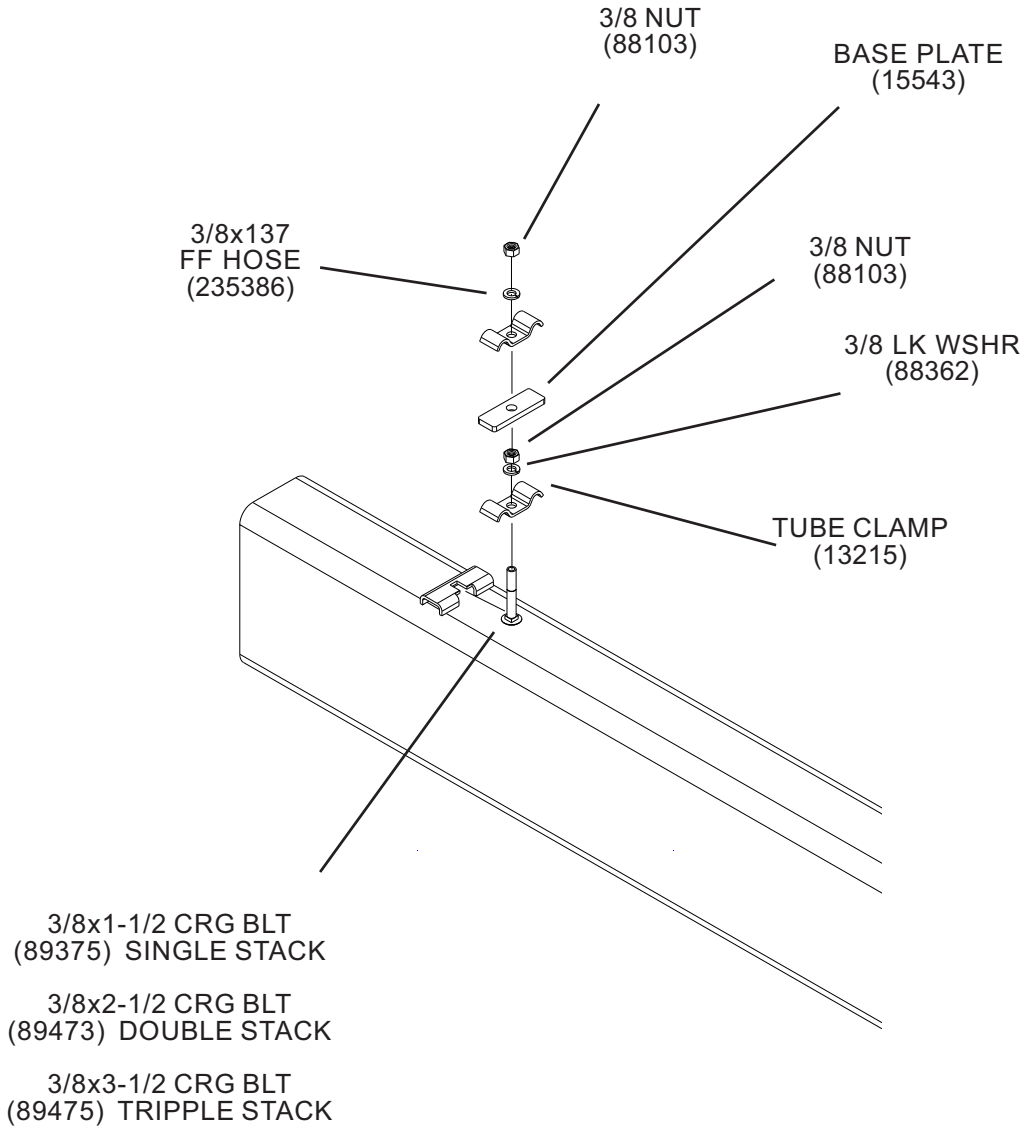

5 SECTION CULTIVATOR

Hydraulic Assembly (Cont'd)

Check Valve With Single Point Valve

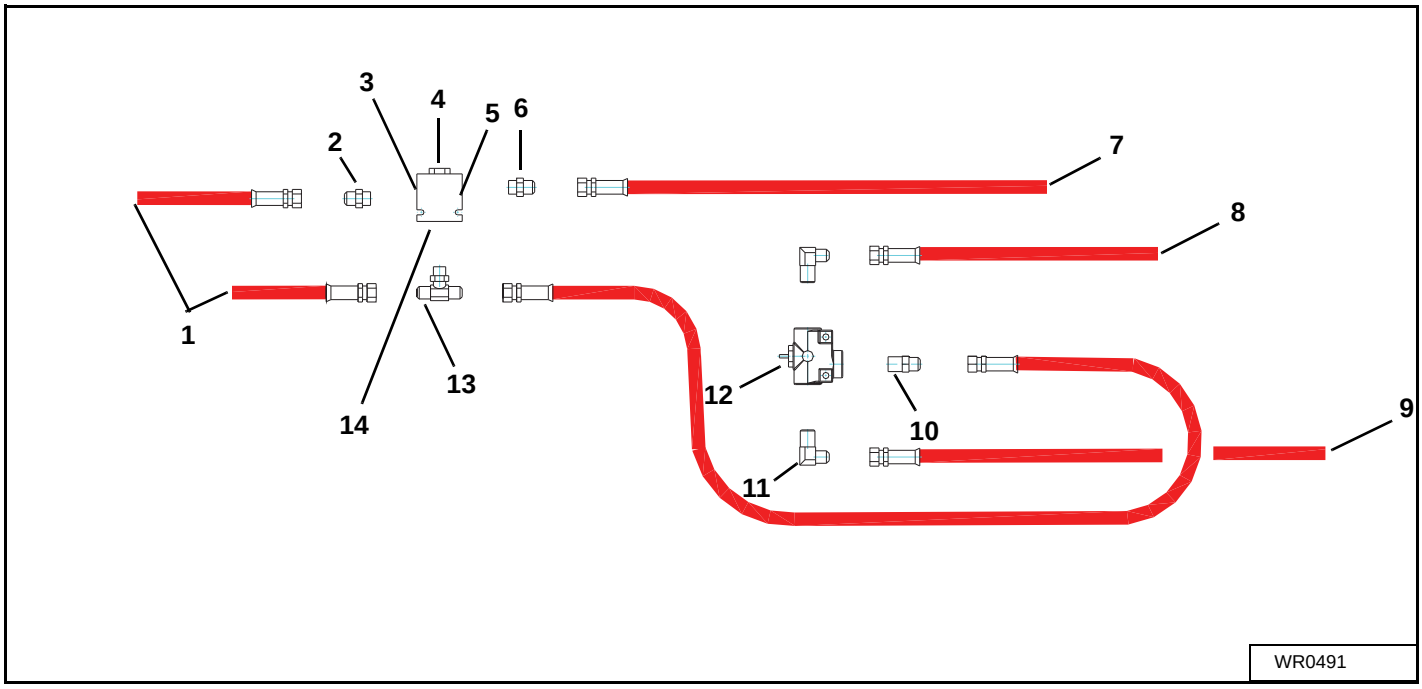

REF.	PART NO.	DESCRIPTION
1		TO TRACTOR REMOTES
2	24024	ADP: 8MORB x 8MJ
3		PORT 2
4	241317	CHECK VALVE, Pilot: (PC10-30-8T-NS-270)
5		PORT 3
6	24024	ADP: 8MORB x 8MJ
7		TEE FROM ROD END OF WING LIFT CYLINDER
8		BUTT END OF RIGHT MAIN LIFT CYLINDER
9		BUTT END OF LEFT MAIN LIFT CYLINDER
10	13234	ADP: 8MJ x 8MPT
11	13236	ELB: 8MJ x 8MPT
12	51975	DCV ASSEMBLY
13	56534	TEE: 8MJ x 8MJ x 8MORB
14		PORT 1

Hydraulic Assembly (Cont'd)

Hose Clamp Assembly

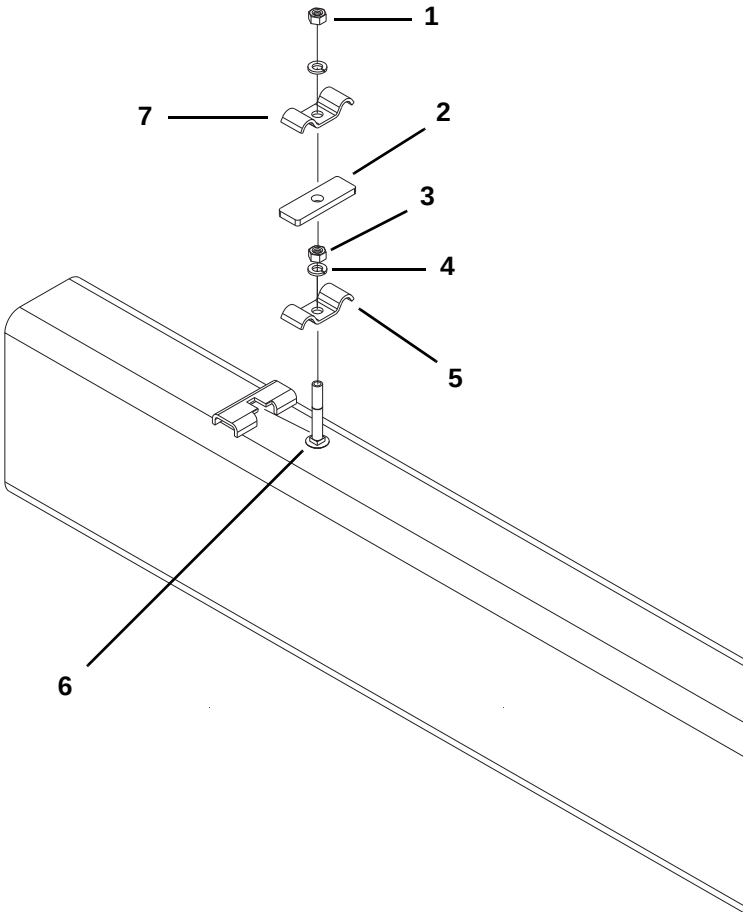

WR0492

REF.	PART NO.	DESCRIPTION
1	88103	NUT, Hex: 3/8-16NC 5ZP
2	15543	BASE PLATE - ZINC
3	88103	NUT, Hex: 3/8-16NC 5ZP
4	88362	WASHER, Helical: 3/8 ID ZP
5	13215	CLAMP, Tube
6	89375	BOLT, Carriage: 3/8-16NC x 1-1/2 5ZP
7	89373	BOLT, Hex: 1-8NC x 8-1/2 8YZP
8	89475	BOLT, Carriage: 3/8-16NC x 3-1/2 2ZP
9	88362	WASHER, Helical: 3/8 ID ZP

Hydraulic Assembly (Cont'd)

STEP 78

Insert two 25580 8MORB X 8MJ elbow fittings (1) into the depth control cylinders of the outer wings as shown.

Route the hydraulic lines from both cylinders to the back of the outer wing.

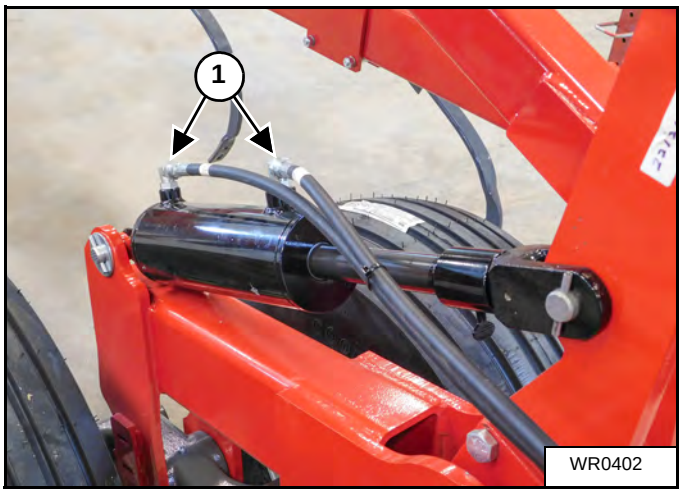

WR0402

STEP 79

Route the hydraulic lines along the back of the wing to the main frame. Be sure the secure the lines with zip ties and route through the loop (1) on the inner wing hinge.

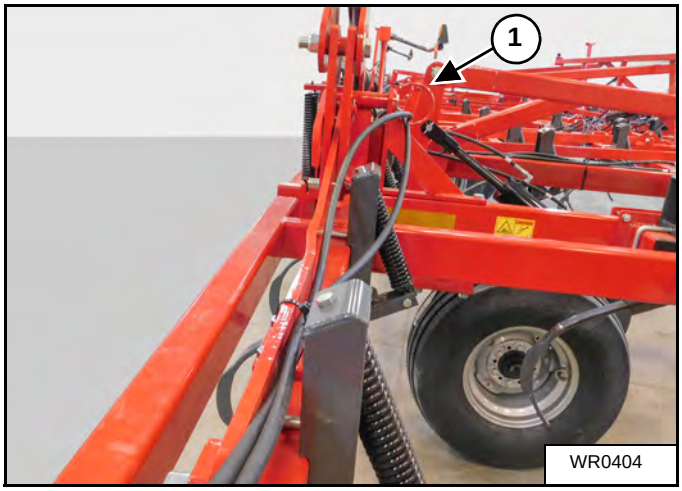

WR0404

STEP 80

Insert two 25580 8MRB x 8MJ elbow fittings (1) into the 67688F2 4 x 10 inch depth control cylinders of the inner wing as shown.

Route one hydraulic line from each depth control cylinder to the back of the inner wing frames.

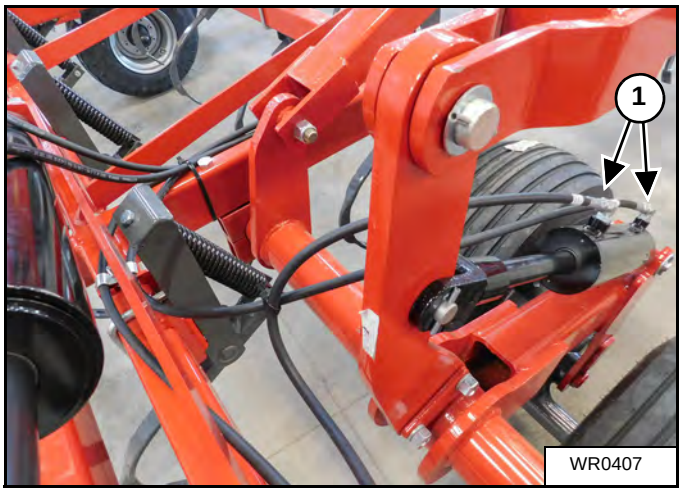

WR0407

Hydraulic Assembly (Cont'd)

STEP 80

Install the 13215 clamp (1) for the hydraulic lines from the 67688F2 depth control cylinder on the inner wing to the frame using a 89375 3/8 x 1-1/2 inch carriage grade 5 bolt, 88362 lock washer and 88103 nut.

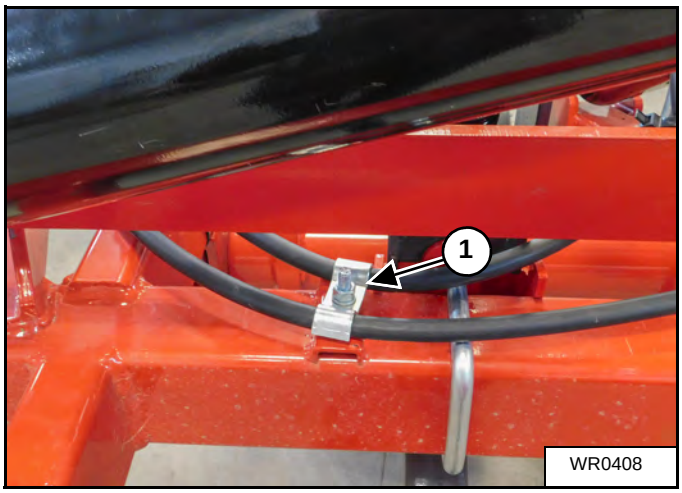

STEP 81

Install a 25580 8MORB x 8MJ elbow fitting (1) into the rod end of the 20966F 5 x 30 inch wing lift cylinder for folding the inner wing as shown.

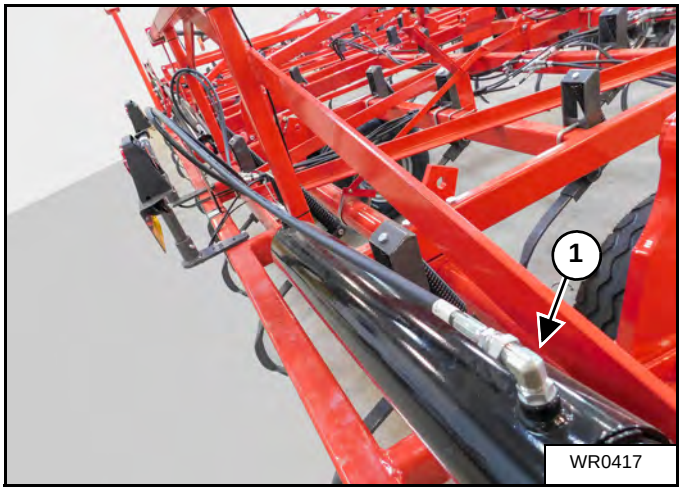

STEP 82

Route the hydraulic lines (1) from the wing lift cylinder and depth control cylinders along the frame towards the center of the main frame where they will connect to the tee fittings (2).

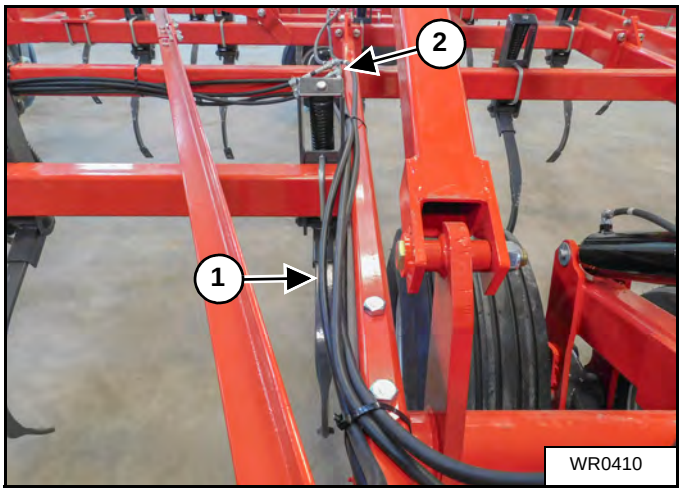

Hydraulic Assembly (Cont'd)

STEP 83

Install the tee fittings (1) on both hydraulic lines from the lift cylinders.

Continue running the depth control lines (2) along the frame towards the main frame.

Attach the two wing lift hydraulic lines to 13238 to tees and route along the depth control lines (2) on the frame.

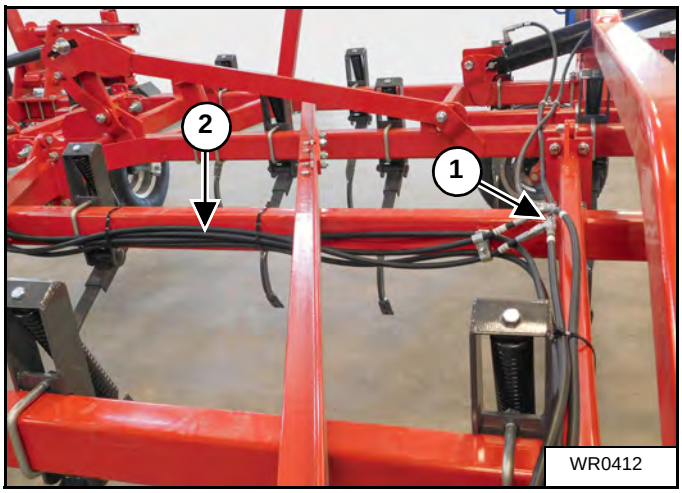

STEP 84

Secure the depth control lines and then the lift lines using a 89373 3/8 x 2-1/2 inch carriage grade 5 bolt (1), 13215 clamp (2), 88362 lock washer (3) and 88103 nut (4).

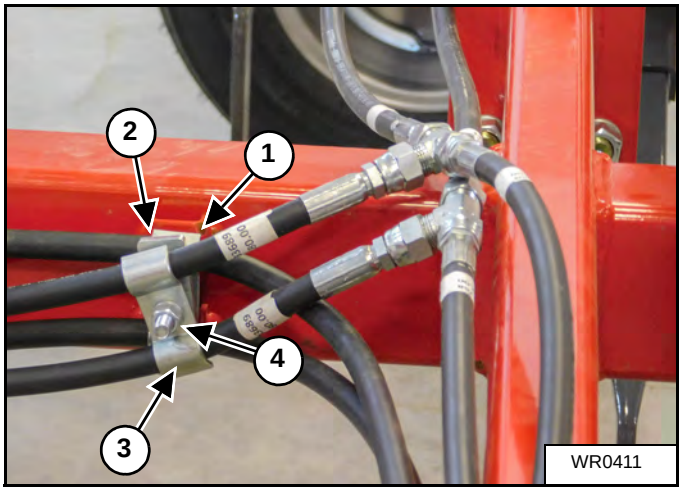

Hydraulic Assembly (Cont'd)

STEP 85

On the inner wing frame secure the depth lines and then the lift lines using a 89473 3/8 x 2-1/2 inch carriage grade 5 bolt, 13215 clamp, 88362 lock washer, 88103 nut, 15543 base plate, a second 13215 clamp, 88362 lock washer and 88103 nut (1).

After crossing from the inner wing frame to the main frame secure the depth lines and then the lift lines using a 89473 3/8 x 2-1/2 inch carriage bolt, 13215 clamp, 88362 lock washer, 88103 nut, 15543 base plate, 13215 clamp, 88362 lock washer and 88103 nut (2) as done in Step 122.

IMPORTANT: Be sure to leave approximately 30 inches (91.4 cm) of hose (3) between clamps on the inner wing (1) and the main frame (2).

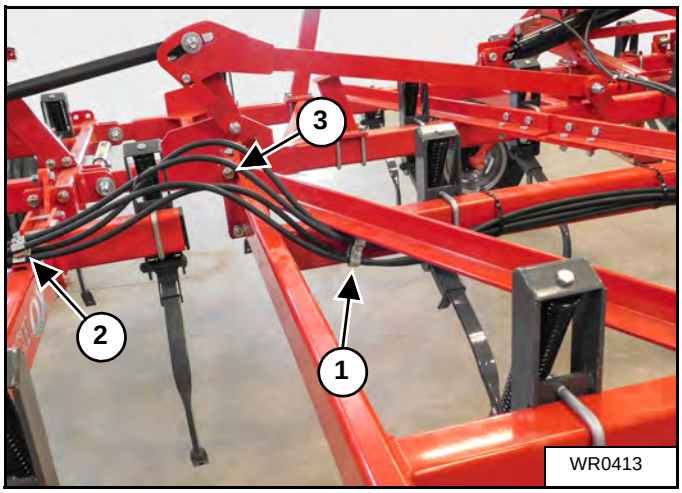

WR0413

STEP 86

Install one line (1) on the depth control cylinder of the main frame and route the remaining three lines along the main frame (2).

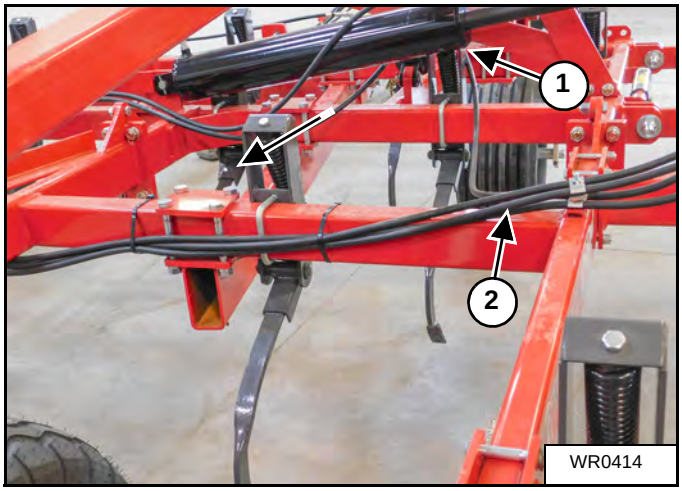

WR0414

Hydraulic Assembly (Cont'd)

STEP 87

Insert a 25580 8MORB x 8MJ elbow fitting (1) into the rod end port of the wing folding cylinder as shown.

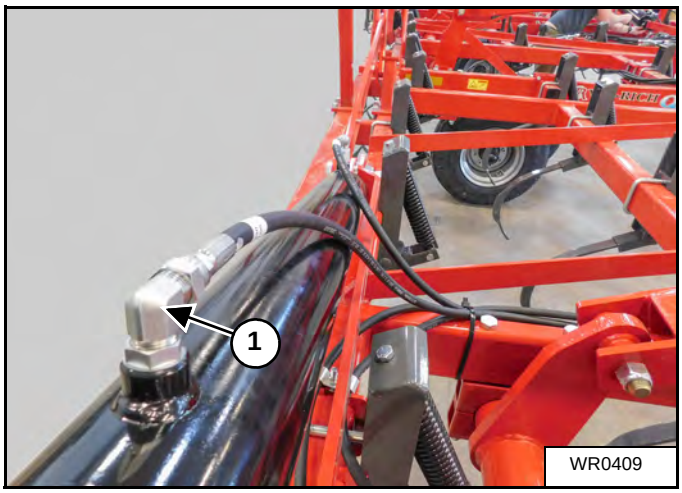

WR0409

STEP 88

Route the hydraulic lines of the wing lift cylinder looping slightly to the 13238 8MJ tee (1) that connects the two wing fold hydraulics at the center point of the main frame.

WR0419

STEP 89

Connect both wing lift hydraulics to the 13238 tee (1) in the center of the main frame. Connect the hoses to the tee along with the wire harnesses (2) from both sets of markers. Run the hoses and harnesses towards the front of the frame as shown.

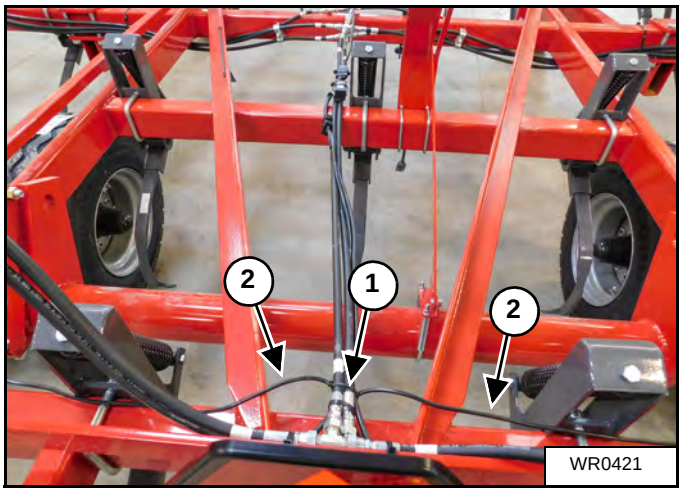

WR0421

Hydraulic Assembly (Cont'd)

STEP 90

Use clamps and cable ties (1) to secure the hoses and wiring harnesses as needed.

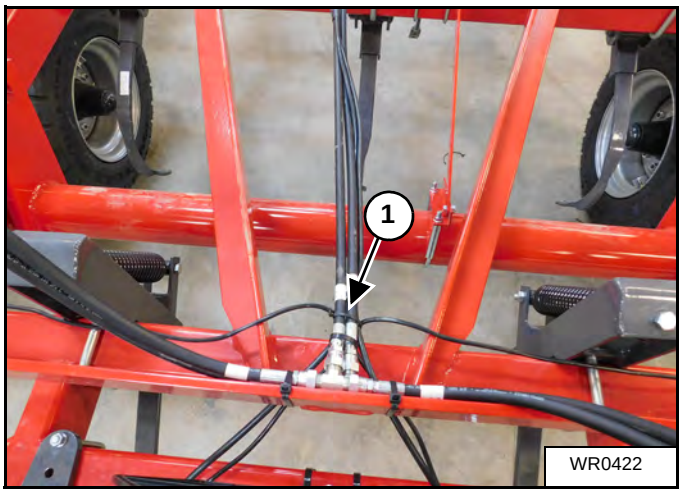

STEP 91

Connect the hoses running from the rear of the main frame and each other wing with 4-way tee fittings (1).

On the right and left sides of the 4-way fittings clamp the lines to the main frame using a 89473 3/8 x 2-1/2 inch bolt, 13215 clamp, 88362 lock washer, 88103 nut, 15543 base plate, 13215 clamp, 88362 lock washer and 88103 nut (2).

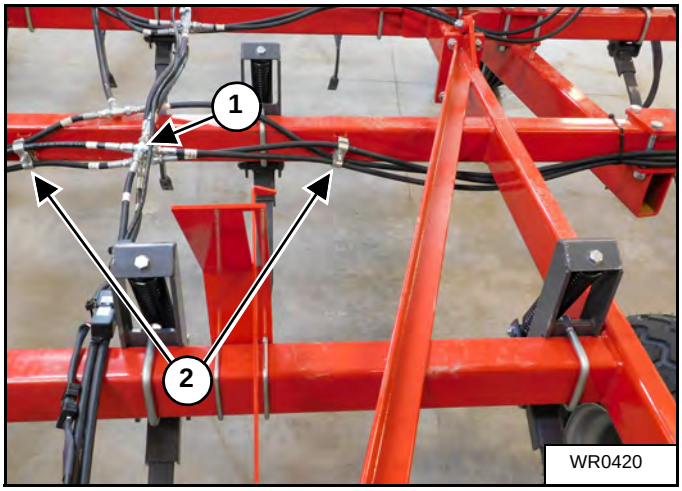

STEP 92

Install a 25580 8MORB x 8 MJ elbow fitting (1) in the single point cylinder in the direction shown.

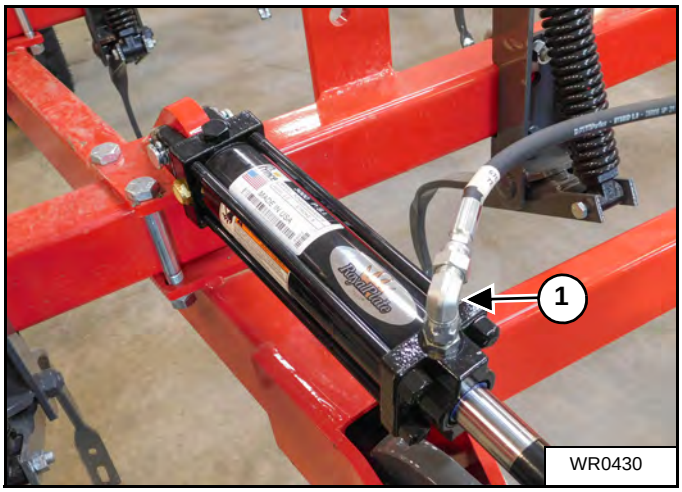

Hydraulic Assembly (Cont'd)

STEP 93

Connect and route the hydraulic hose (1) from the single point cylinder to the other single point cylinder (2).

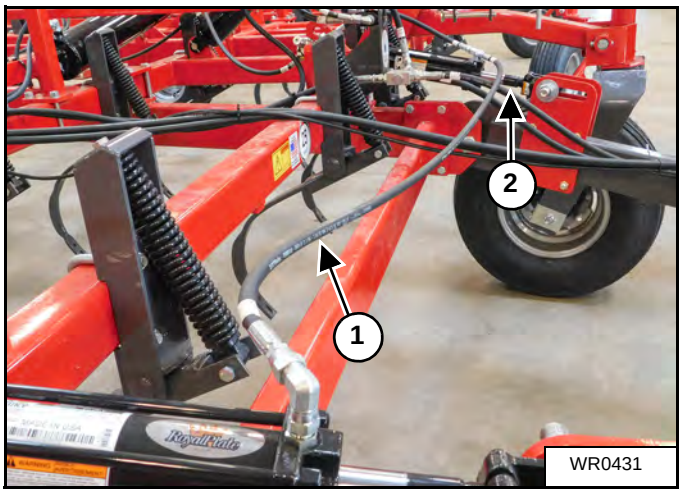

WR0431

STEP 94

Install a 3-way tee (1) into the single point hydraulic cylinder positioned as shown.

Connect the hose (2) from Step 150 to one port of the 3-way tee (1).

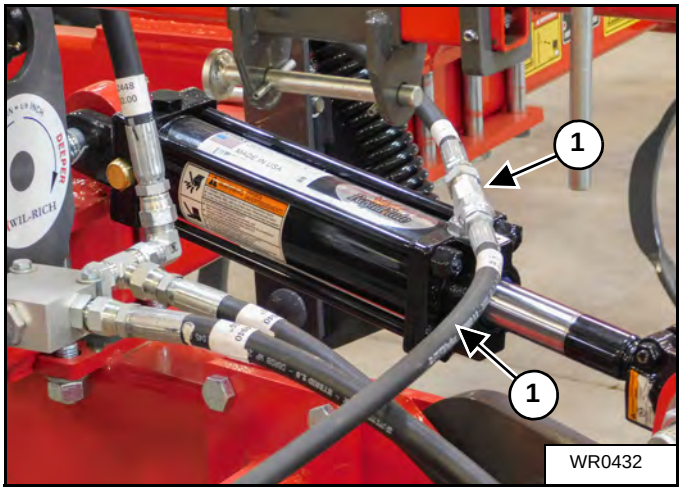

WR0432

STEP 95

Insert an 25580 8MORB x 8MJ elbow fitting (1) in the rod end port of the outer wing cylinder as shown.

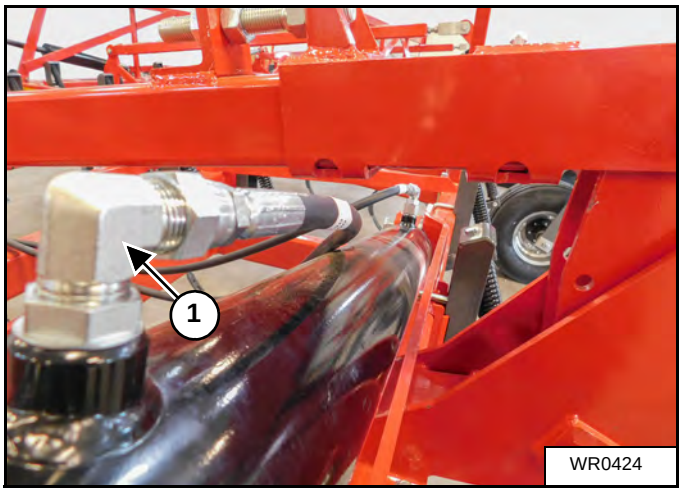

WR0424

Hydraulic Assembly (Cont'd)

STEP 96

Route the hydraulic lines towards the rear of the frame. Secure the hydraulic lines with a 89375 3/8 x 1-1/2 inch carriage grade 5 bolt, 13215 clamp, 88362 lock washer, and 88103 nut (1).

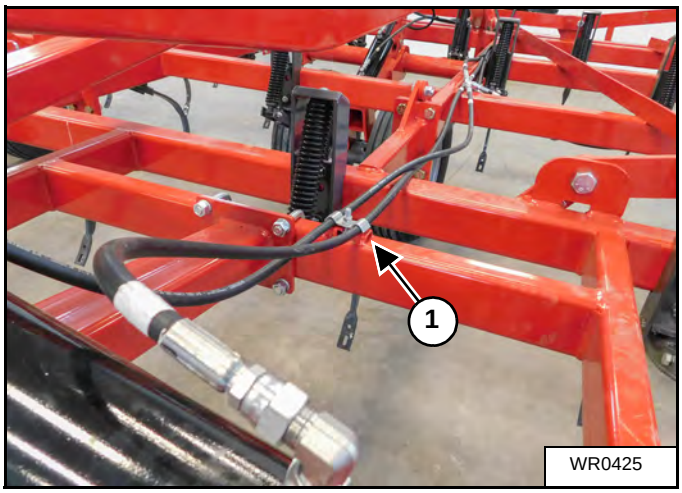

STEP 97

Follow the diagram (on Page 48) for connecting the hose to the single point valve (1).

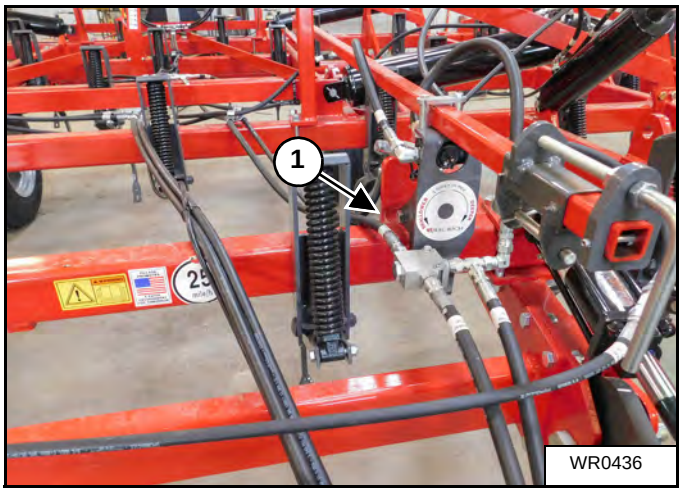

Hydraulic Assembly (Cont'd)

STEP 98

Route all the hydraulic lines along the hitch frame towards the hitch.

Use a 89473 3/8 x 2-1/2 inch carriage grade 5 bolt, 13215 clamp, 88362 lock washer, 88103 nut, 15543 plate, 13215 clamp, 88362 lock washer and 88103 nut (1) to secure the hoses to the frame.

NOTE: Secure any loose hoses with cable ties as needed.

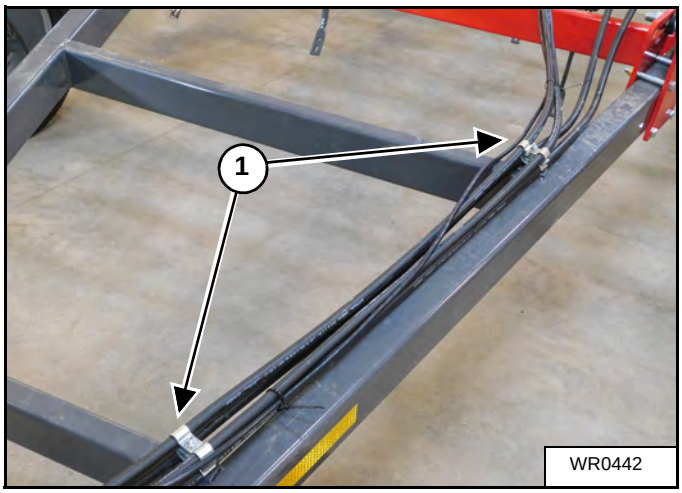

STEP 99

Run the hydraulic lines through the opening (1) in the hose holder as shown.

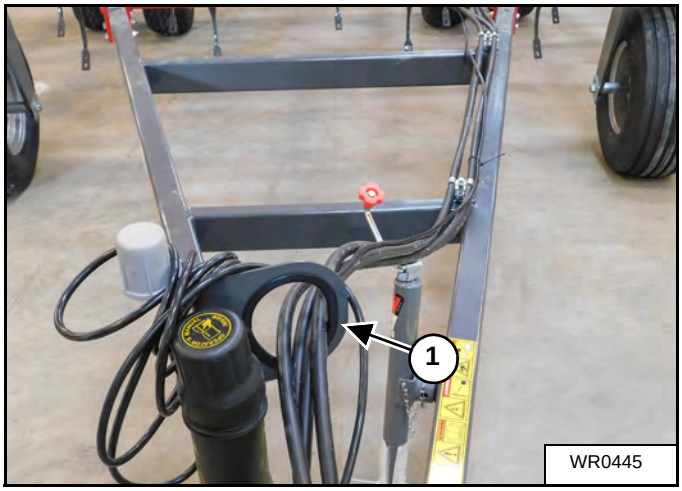

STEP 100

Connect the wiring harnesses (1) as shown.

NOTE: Use cable ties to secure the harness to the hydraulic hoses running to the hitch.

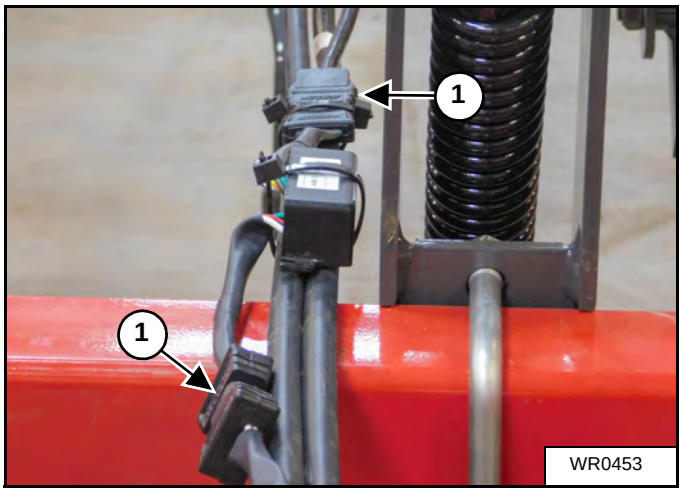

Hydraulic Assembly (Cont'd)

STEP 101

Be sure to keep electrical wire harness straight as it is routed to the hitch, securing it with cable ties to the hydraulic lines.

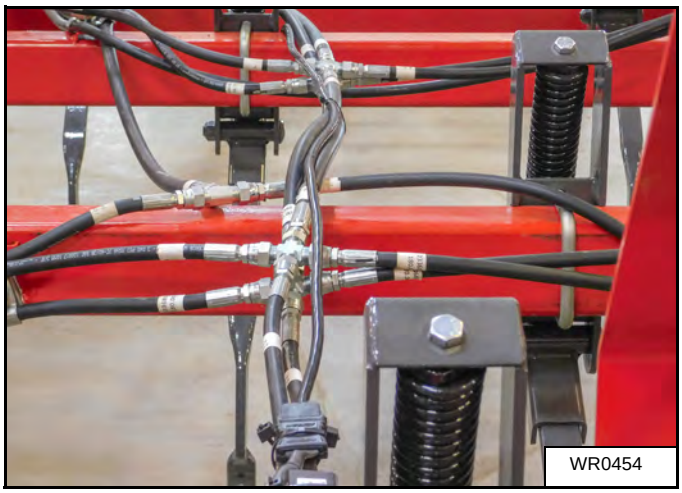

STEP 102

Use two large cable ties to secure the relief valve (1) to the frame bracket.

Branding Decal Layout For 5-Section QX2

Mainframe Edge. Front of Machine at left of Image.

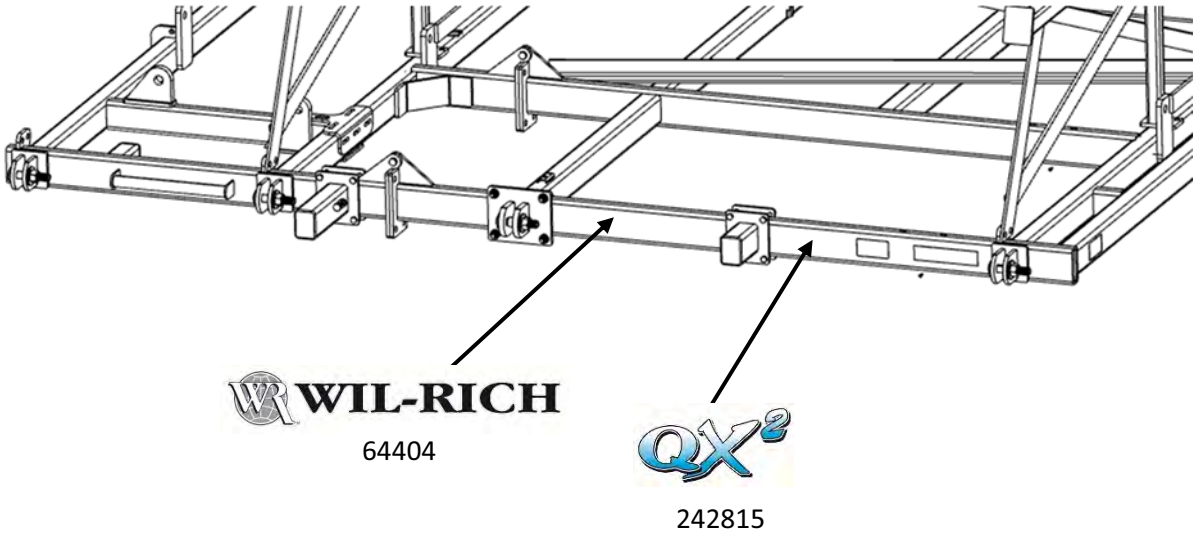

Outer Wing Edge. Front of Machine at left of Image.

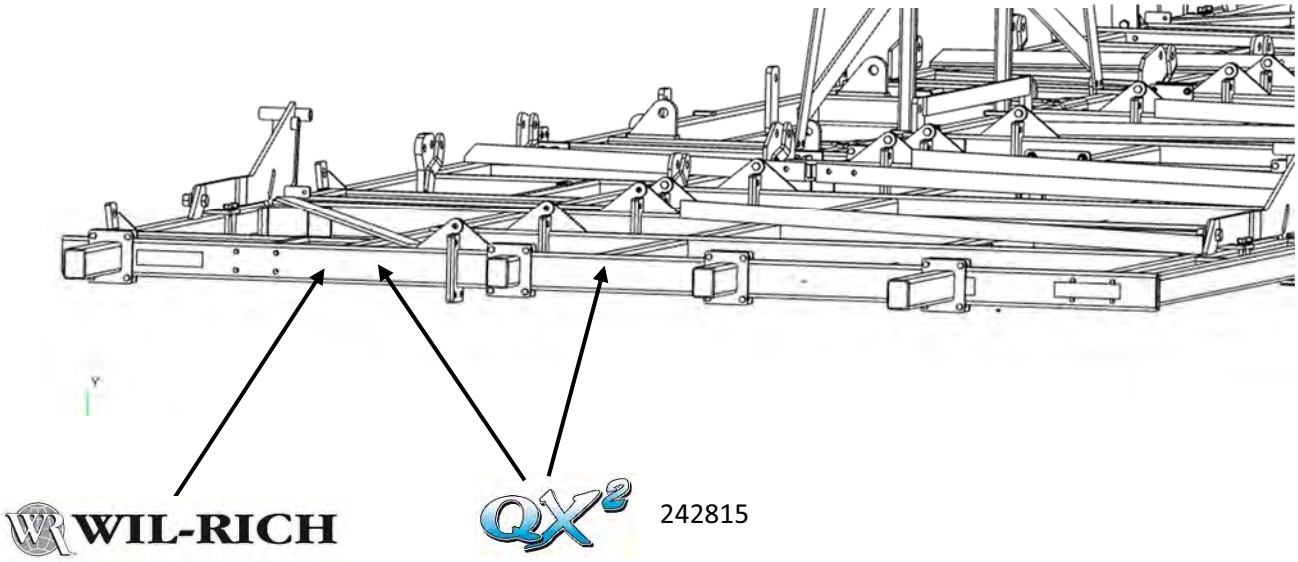

If the QX2 decal fits please place it next to the Wil-Rich Decal. If not place in between the second and third stubs.

Initial Charging of the Lift Systems

With all connections secured and the cylinders supported to allow rod extension apply pressure to the system.

The main or base cylinder should extend as oil flows into the base of the cylinder. The outer cylinders may extend quickly if there is air in the remaining cylinders and in the connecting hoses. If the cylinders are extended, it does not mean the system has been purged. Continue to direct oil into the system until all cylinders are fully extended.

NOTE: The cylinders will only bypass when the cylinders are fully extended. By allowing the cylinders to extend without lifting the unit, it allows the cylinders to reach the bypass position.

Keep in mind that all the oil going to the outer cylinders must be bypassed through the base cylinder bypass hole and subsequent cylinders. This will take some time. In some cases, a considerable amount of time. On a large unit with multiple wings and lift cylinders it will take longer to charge the system and a large amount of oil will be required. Check that the tractor has sufficient oil capacity. Oil may need to be added to the reservoir. A system pressure of 2500 to 3000 psi will be required to force all the oil through the bypass holes.

Once all the cylinders on the unit have been fully extended, retract the cylinders and extend fully. Hold the cylinders in the extended (bypass) position for a few minutes, retract the cylinders and observe that the cylinders are working in sequence. Attach the cylinder rod ends to the anchor points of the unit. Raise and lower the unit and check to ensure the unit is moving in a level manner.

If the cylinders have been properly bypassed, all cylinders and hoses should be filled with oil with no air in the system. In actuality there will be some air in the system as it is unlikely all air has been purged from the system. Even with some air in the system the cylinders should move in sequence and lift and control the depth of the unit. If the cylinders don’t seem to be bypassing it may indicate that some debris has blocked the bypass hole. To prevent a blocked bypass hole, it is critical to maintain clean oil. Protect the complete hydraulic system at all connection points.

Wing Fold System Information

Wil-Rich products use several varying designs to fold implement wings. All utilize a two-way cylinder of varying diameters and strokes. All wing fold cylinders use an integral or in-line restrictor to control the cylinder stroke speed. This restrictor is critical to the safe operation of the unit and use of non-Wil-Rich cylinders is not recommended.

Assembly of the wing fold circuitry and mounting of the fold cylinders is outlined in the appropriate Assembly Manual. It is important to properly charge the wing fold cylinders and circuitry in the assembly process. Mount the base of all wing fold cylinders to their anchor points as noted. Tighten all hoses and fittings per specifications. **Before attaching the rod ends of any wing fold cylinders fully extend and retract all cylinders to ensure that the cylinders are filled with oil.** This can be made easier by supporting the cylinders with some type of blocking. Support so that all cylinder rods can be extended and retracted without machine interference. After the cylinders are fully charged attach the rod end of the cylinders to the appropriate anchor. Pressurize the system and check for proper wing fold.

When folding any winged implement make certain that the wing fold cylinders have been fully retracted. **Any time the unit is to be stored with the wings folded, whether connected to the tractor's hydraulic system or disconnected, it is critical to relieve any pressure from the wing fold circuit. On an older tractor, shutting the tractor down, moving the control lever back and forth before disconnecting the hoses can relieve this pressure. Modern tractors can retain significant pressure in the hydraulic lines and contain this pressure once the lines have been disconnected. Before disconnecting the folding cylinder hydraulic hoses, relieve pressure from the wing-fold hydraulic system by moving the tractor control valve to the float position while the engine is running.**

It is critical to relieve the pressure on all wing fold circuits before storing the unit. Failure to do so may allow the wings to extend or unfold unexpectedly.

INNER WING HINGE

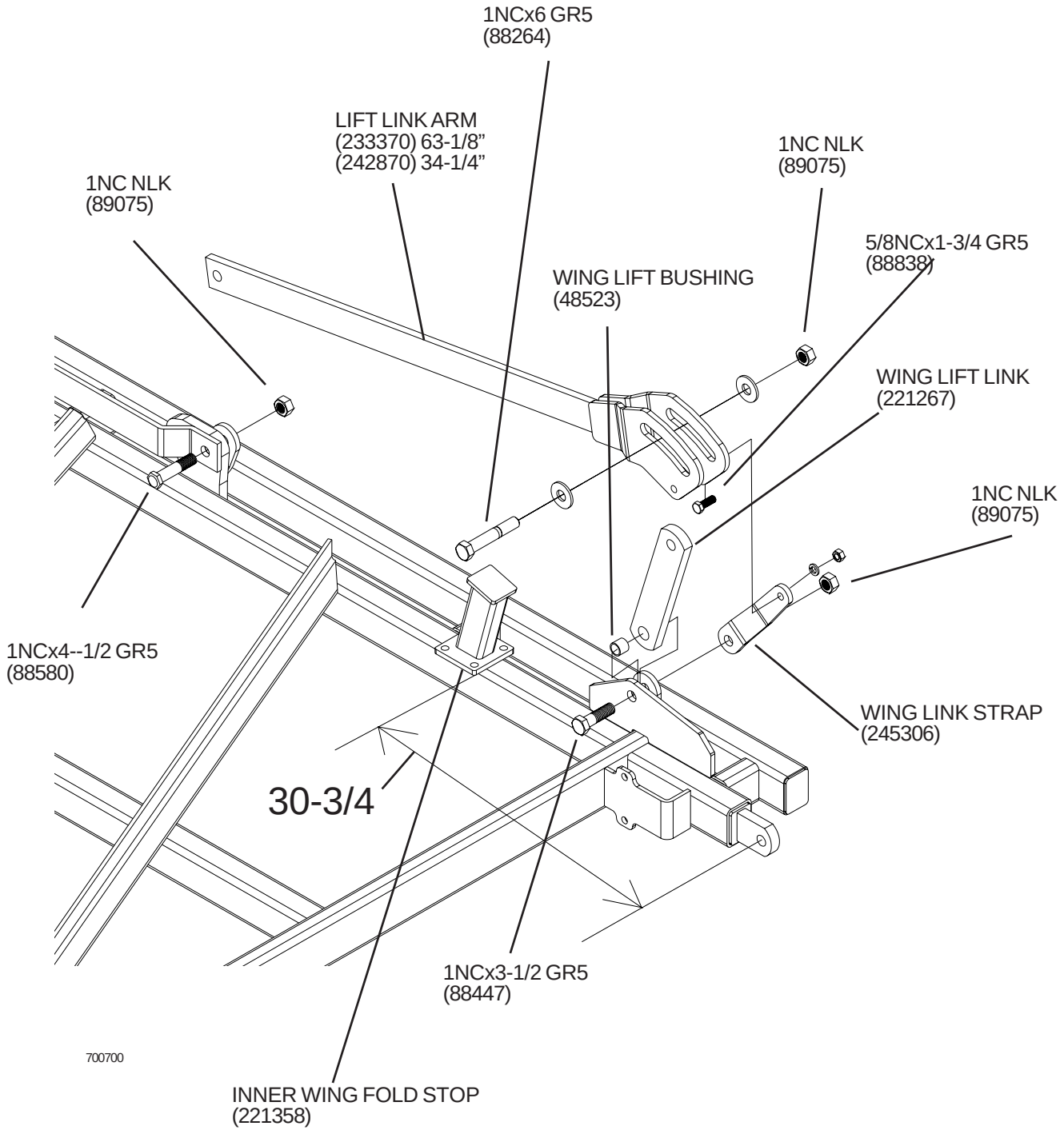

OUTER WING HINGE

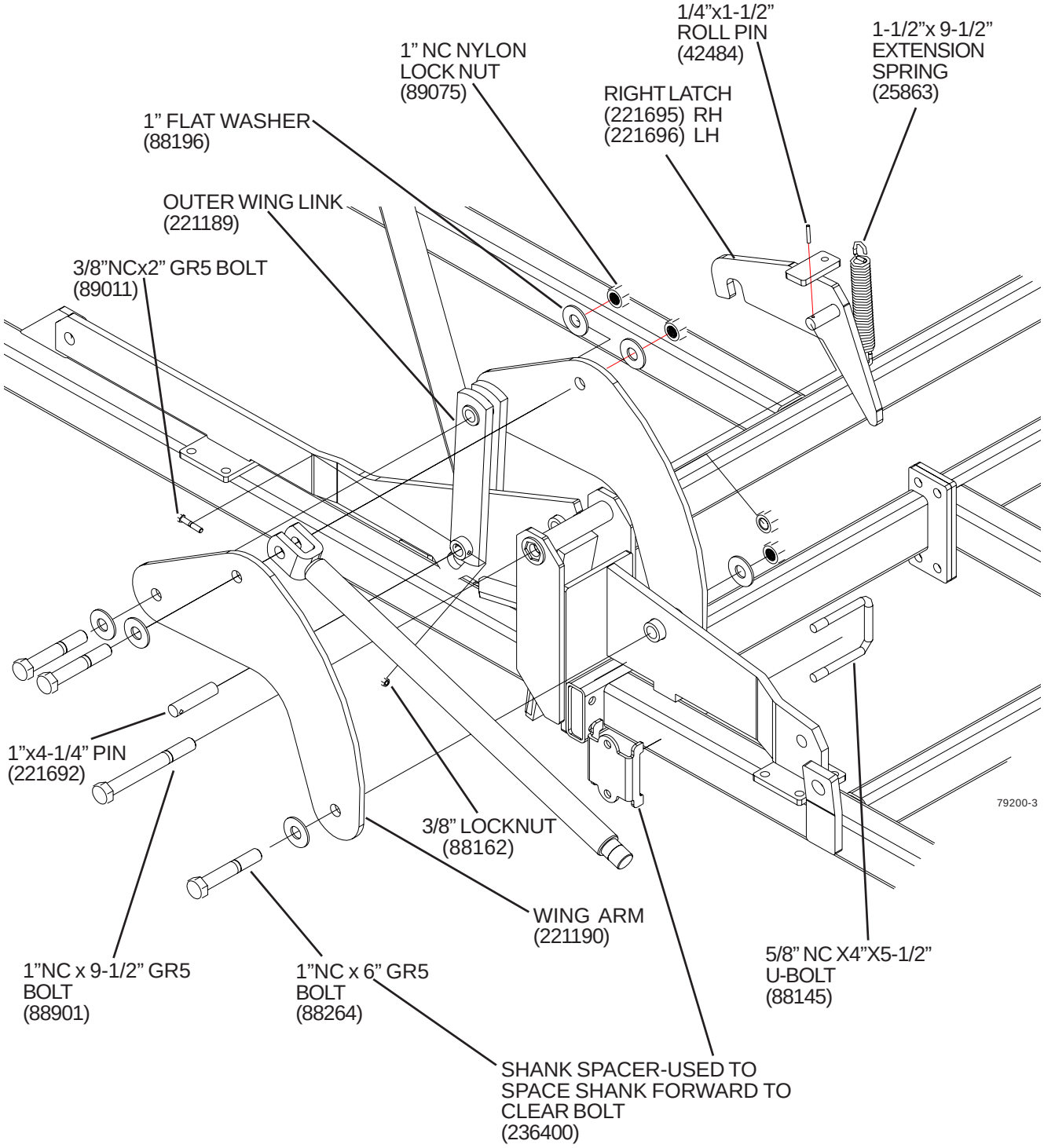

DEPTH INDICATOR

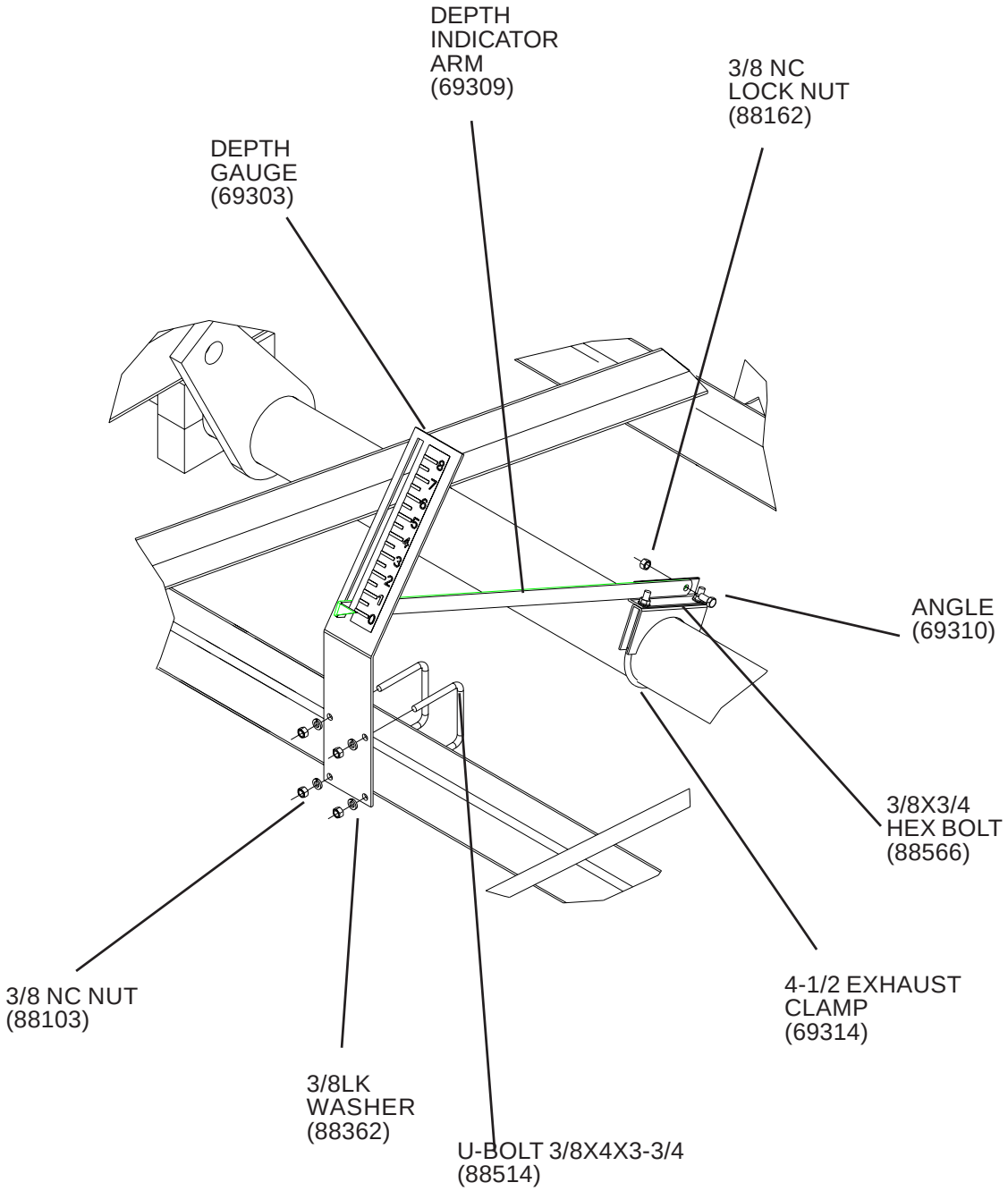

HANDLE ASSEMBLY

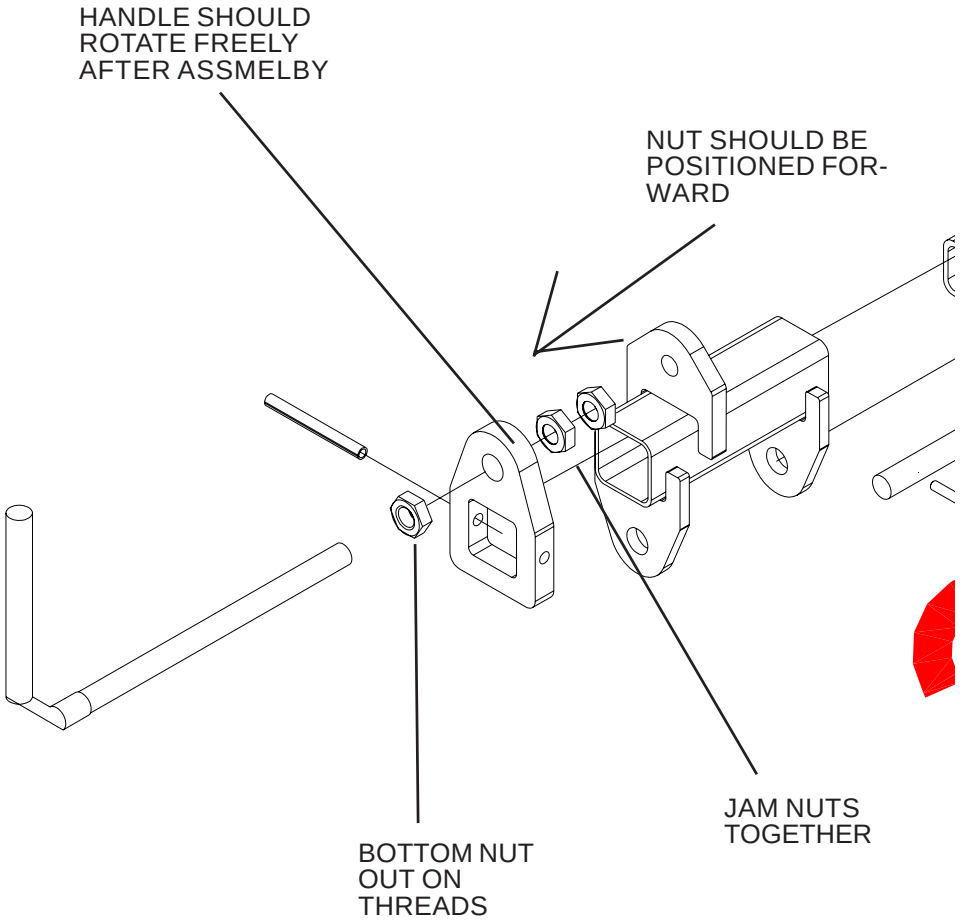

CHECK VALVE
WITH SINGLE POINT VALVE

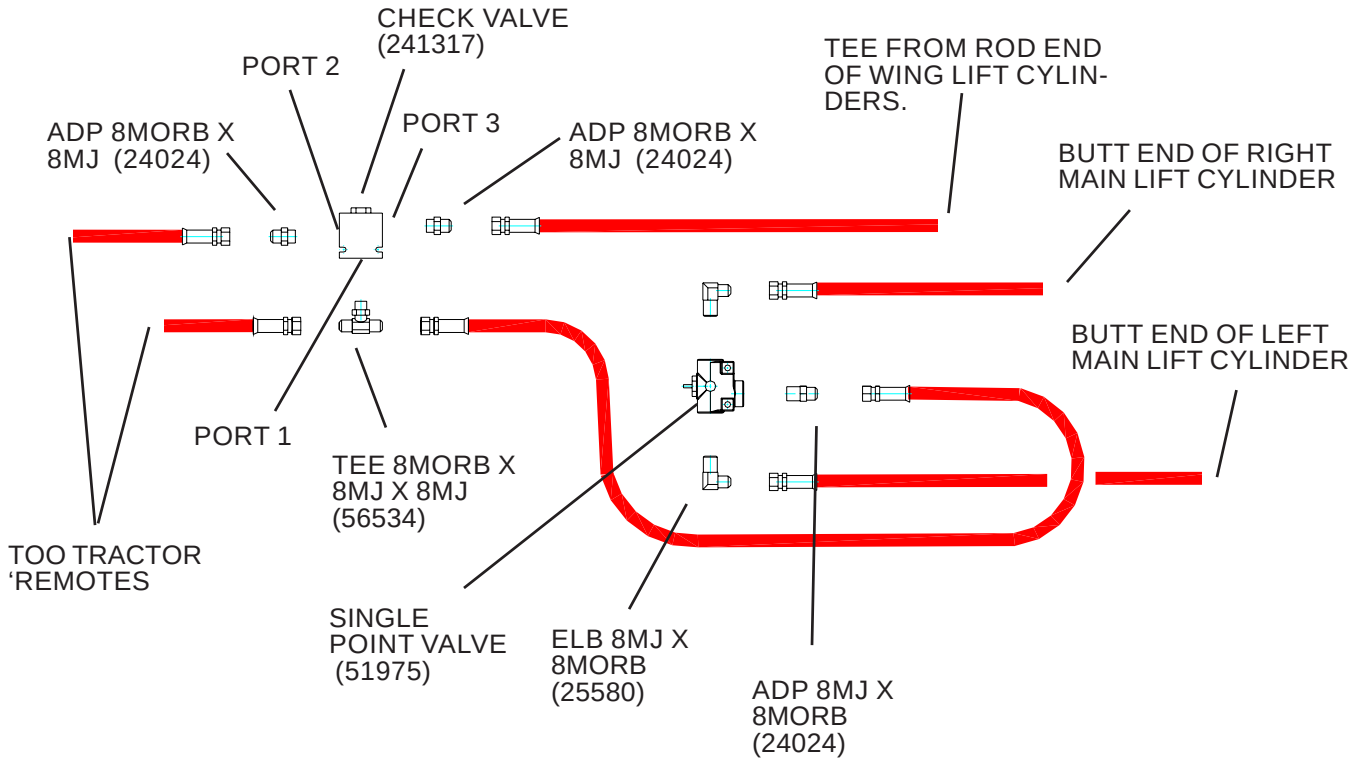

HOSE CLAMP ASSEMBLY

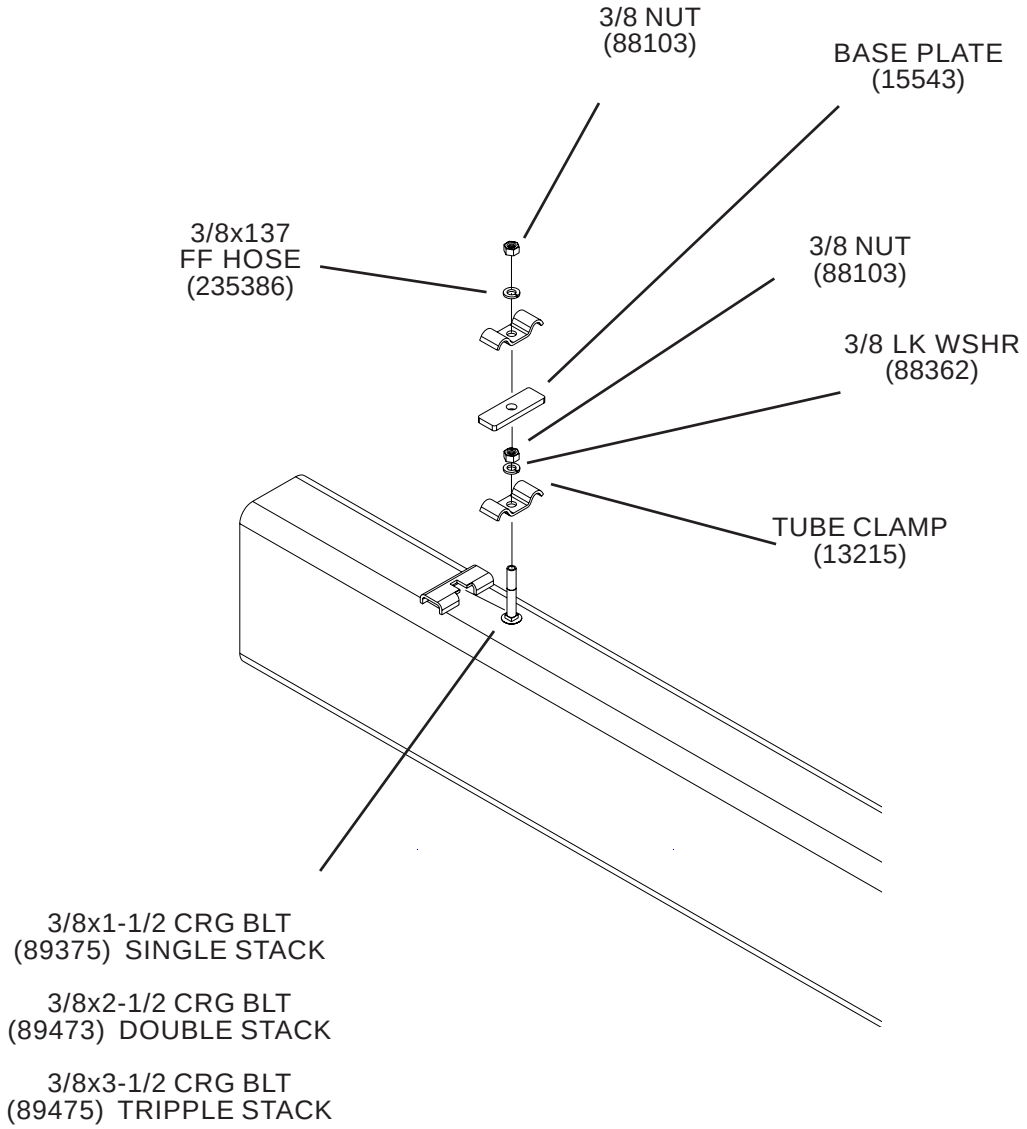

46

DEPTH CONTROL HYDRAULICS

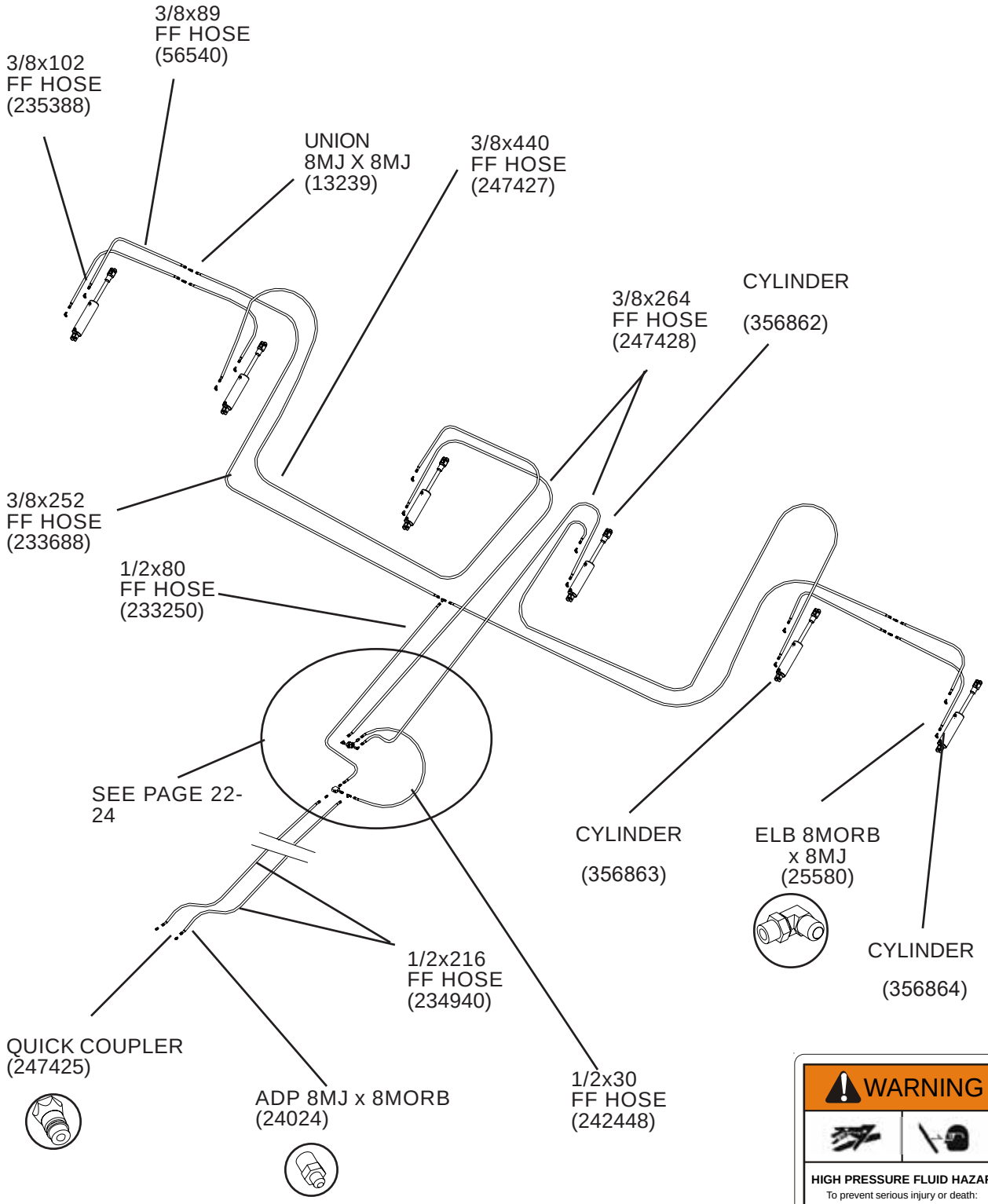

55

DEPTH CONTROL HYDRAULICS

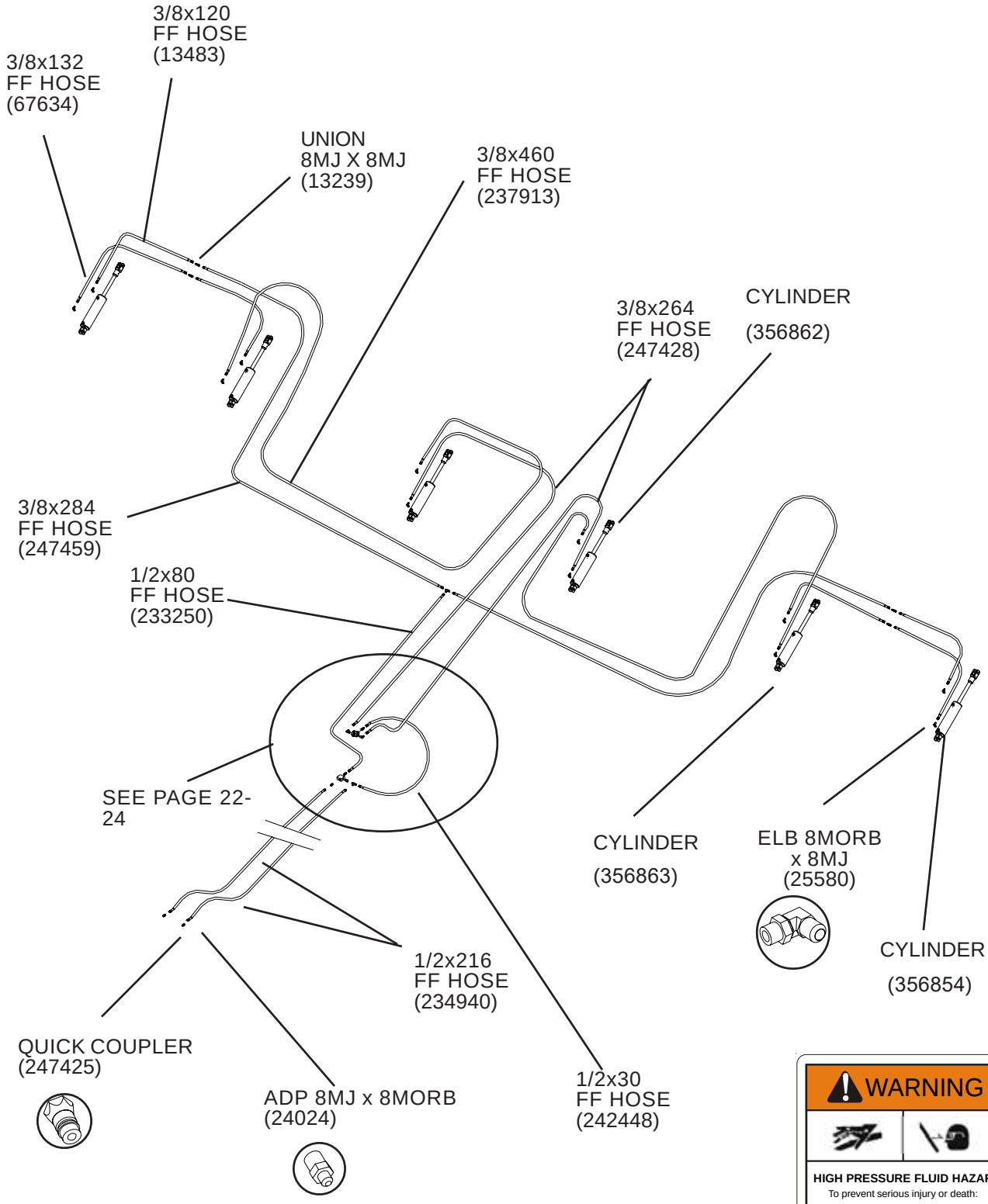

Initial Assembly and Charging of Lift Systems

All WIL-RICH lift systems should be assembled as noted in the appropriate assembly manual. For best functional results the following steps should be followed.

1) Position the main lift cylinders in the locations and connect the hydraulic circuitry as shown. Attach the base end of all cylinders but do not connect the rod ends. Support the cylinders to allow the rods to extend without machine contact.
2) Most fittings, except the connection tips at the tractor end and some valves, are JIC or O-ring type fitting. JIC and O-ring fitting do not require any type of thread compound to seal properly. **NOTE: Take care to keep all connections, fitting, hose, etc as clean as possible.**
3) Where pipe threads are used a thread-sealing compound should be used. **NOTE: Do not use Teflon type tape on any hydraulic circuitry; use an appropriate liquid compound. If any tape or contaminate enters the system if can clog the bypass hole.**
4) With all connections secured and the cylinders supported to allow rod extension apply pressure to the system.

The main or base cylinder should extend as oil flows into the base of the cylinder. Because there is air in the remaining cylinders and in the connecting hoses the outer cylinders may extend quickly. Just because the cylinders are extended does not mean the system has been purged. Continue to direct oil into the system until all cylinders have extended fully. **NOTE: the cylinders will only bypass when the cylinders are fully extended. By allowing the cylinders to extend without having to lift the unit you allow the cylinders to reach the bypass position.**

Keep in mind that all the oil going to the outer cylinders must be bypassed through the base cylinder bypass hole and subsequent cylinders. This will take some time, in some cases a considerable amount of time. On large unit with multiple wings and lift cylinders it will take longer to charge the system and a large amount of oil will be required. Check that your tractor has sufficient oil capacity; you may need to add oil to your reservoir. Also, because of the of the need to force all the oil though the by-pass holes you will need to have a system pressure of 2500-3000 psi.

Once all cylinders on the unit have been fully extended, retract the cylinders and again extend fully. Hold the cylinders in the extended (bypass) position for a few minutes, retract the cylinders and observe that the cylinders are working in sequence. Attach the cylinder rod ends to the anchor points of the unit. Raise and lower the unit and check to ensure the unit is moving in a level manner.

If the cylinders have been properly bypassed, all cylinders and hoses should be filled with oil with no air in the system. In actuality there will still be some air in the system as it is unlikely all air has been purged from the system. Even with some air in the system the cylinders should move in sequence and lift and control the depth of the unit. If the cylinders don't seem to be bypassing it may indicate that some debris has blocked the bypass hole. Because the hole may be blocked it is critical to maintain clean oil. Protect the complete hydraulic system at all connection points.

Wing Fold System Information

WIL-RICH products use a number of varying designs to fold implement wings. All utilize a two-way cylinder of varying diameters and strokes. All wing fold cylinders use an integral or in-line restrictor to control the cylinder stroke speed. This restrictor is critical to the safe operation of the unit and use of non-WIL-RICH cylinders is not recommended.

Assembly of the wing fold circuitry and mounting of the fold cylinders is outlined in the appropriate Assembly Manual. It is important to properly charge the wing fold cylinders and circuitry in the assembly process. Mount the base of all wing fold cylinders to their anchor points as noted. Tighten all hoses and fittings per specifications. **Before attaching the rod ends of any wing fold cylinders fully extend and retract all cylinders to ensure that the cylinders are filled with oil**. This can be made easier by supporting the cylinders with some type of blocking. Support so that all cylinder rods can be extended and retracted without machine interference. After the cylinders are fully charged attach the rod end of the cylinders to the appropriate anchor. Pressurize the system and check for proper wing fold.

When folding any winged implement make certain that the wing fold cylinders have been fully retracted. **Any time the unit is to be stored with the wings folded, whether connected to the tractor hydraulic system or disconnected, it is critical to relieve any pressure from the wing fold circuit. On older tractor, shutting the tractor down, moving the control lever back and forth before disconnecting the hoses can relieve this pressure. Modern tractor can retain significant pressure in the hydraulic lines and contain this pressure once the lines have been disconnected. Before disconnecting folding cylinder hydraulic hoses, relieve pressure from the wing-fold hydraulic system by moving the tractor control valve to the float position while the engine is running.**

It is critical to relieve the pressure on all wing fold circuits before storing the unit. Failure to do so may allow the wings to extend or unfold unexpectedly.

13’ MAIN FRAME

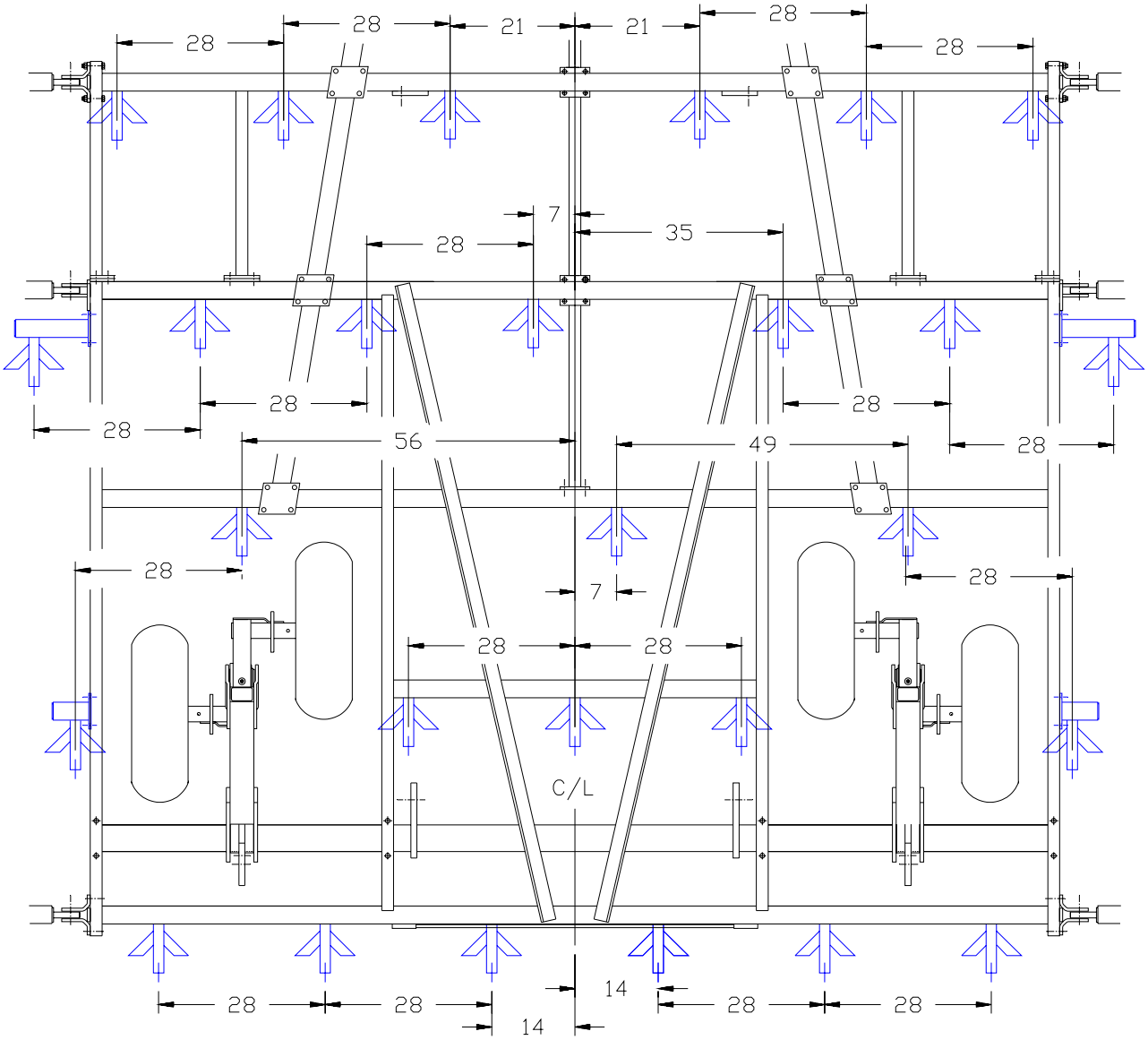

79115-13.PLT

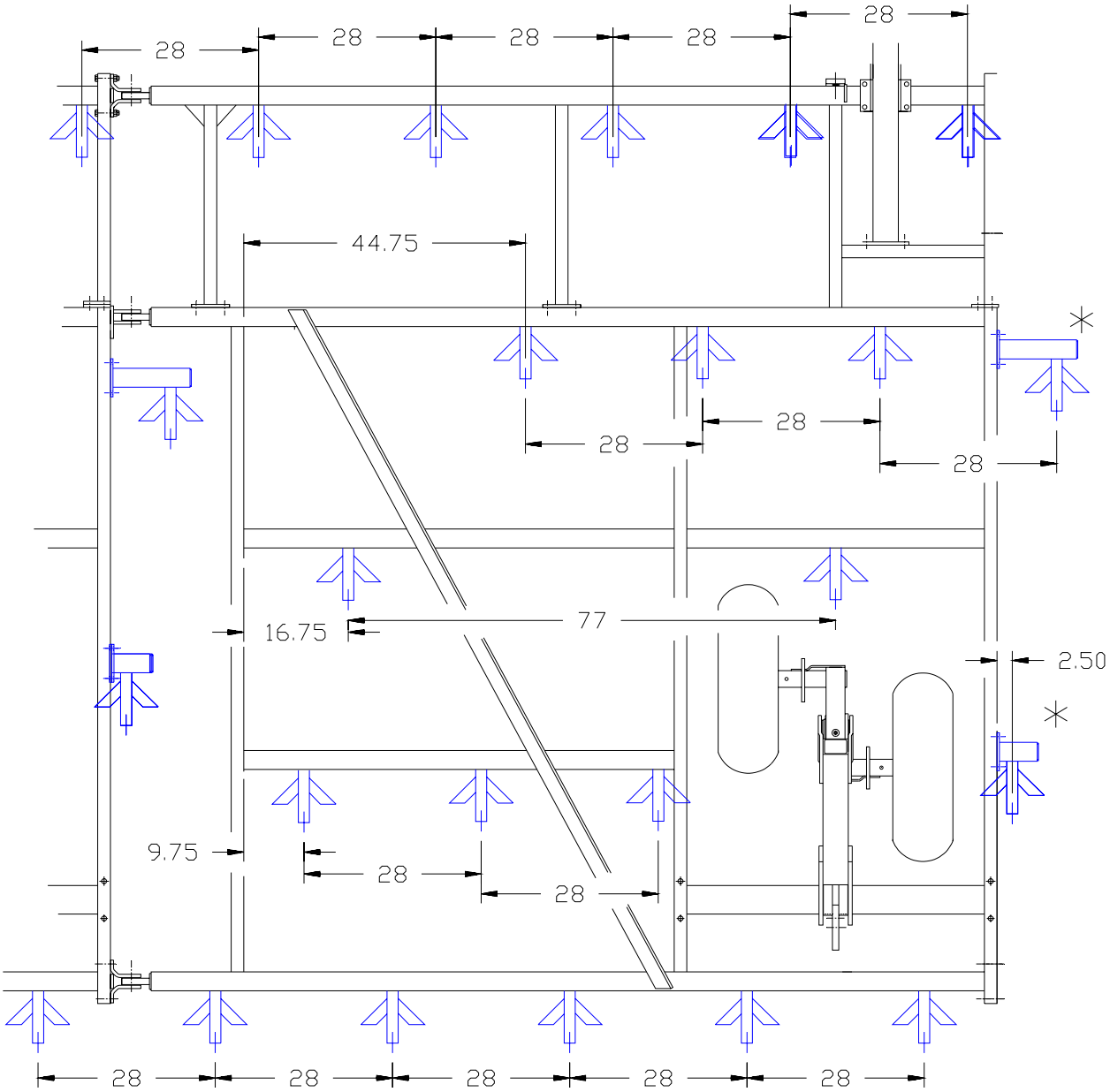

79115W11.PLT

9’4” INNER WING

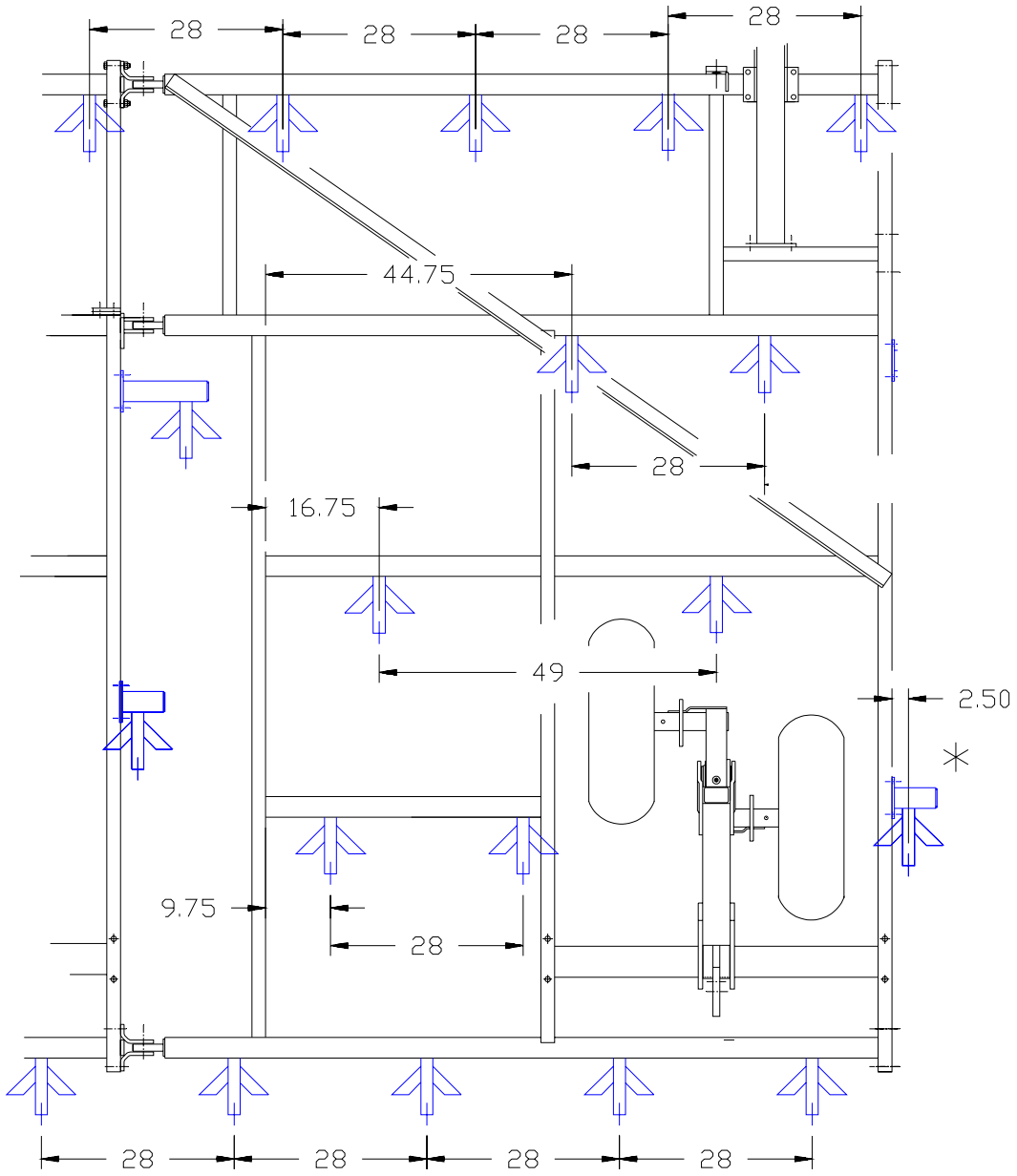

79115-9.PLT

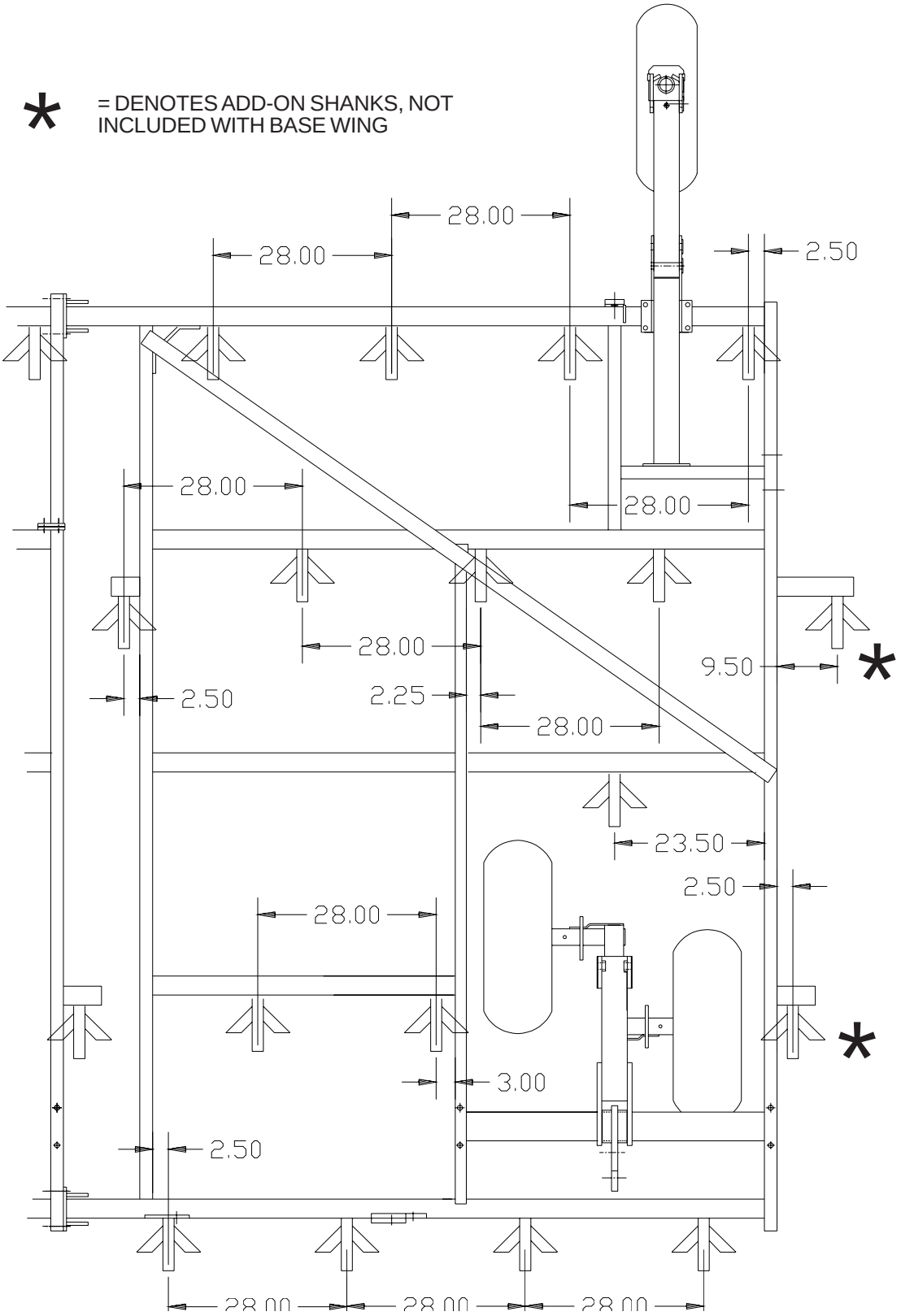
* = DENOTES ADD-ON SHANKS, NOT INCLUDED WITH BASE WING
28.00
28.00
2.50
28.00
28.00
28.00
9.50
*
2.50
2.25
28.00
23.50
2.50
28.00
*
3.00
2.50
28.00
28.00
28.00

94OWSHANK

7’ OUTER WING

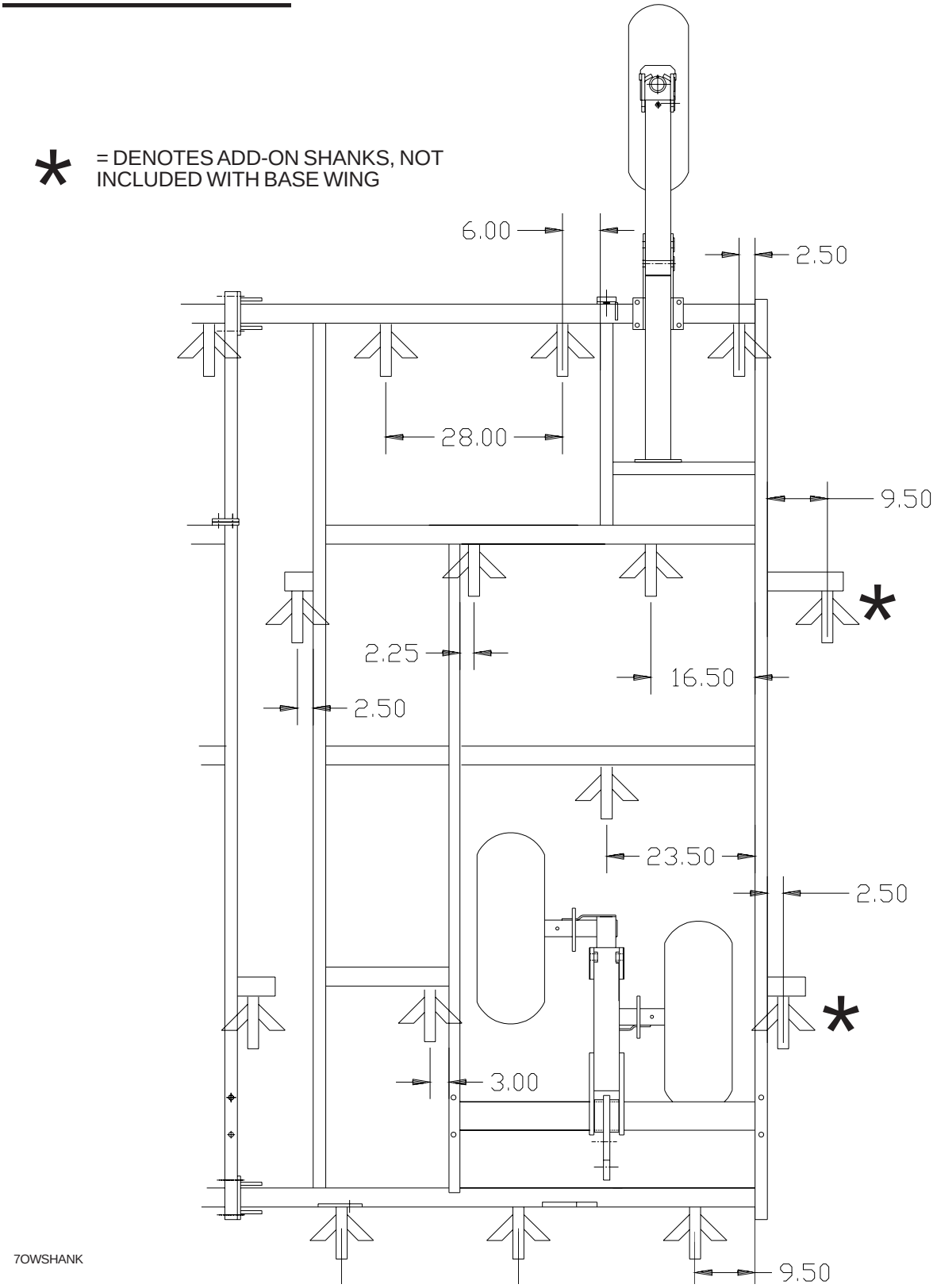
* = DENOTES ADD-ON SHANKS, NOT INCLUDED WITH BASE WING
6.00
2.50
28.00
9.50
*
2.25
16.50
2.50
23.50
2.50
*
3.00
9.50
7OWSHANK

HD AUXILIARY HITCH

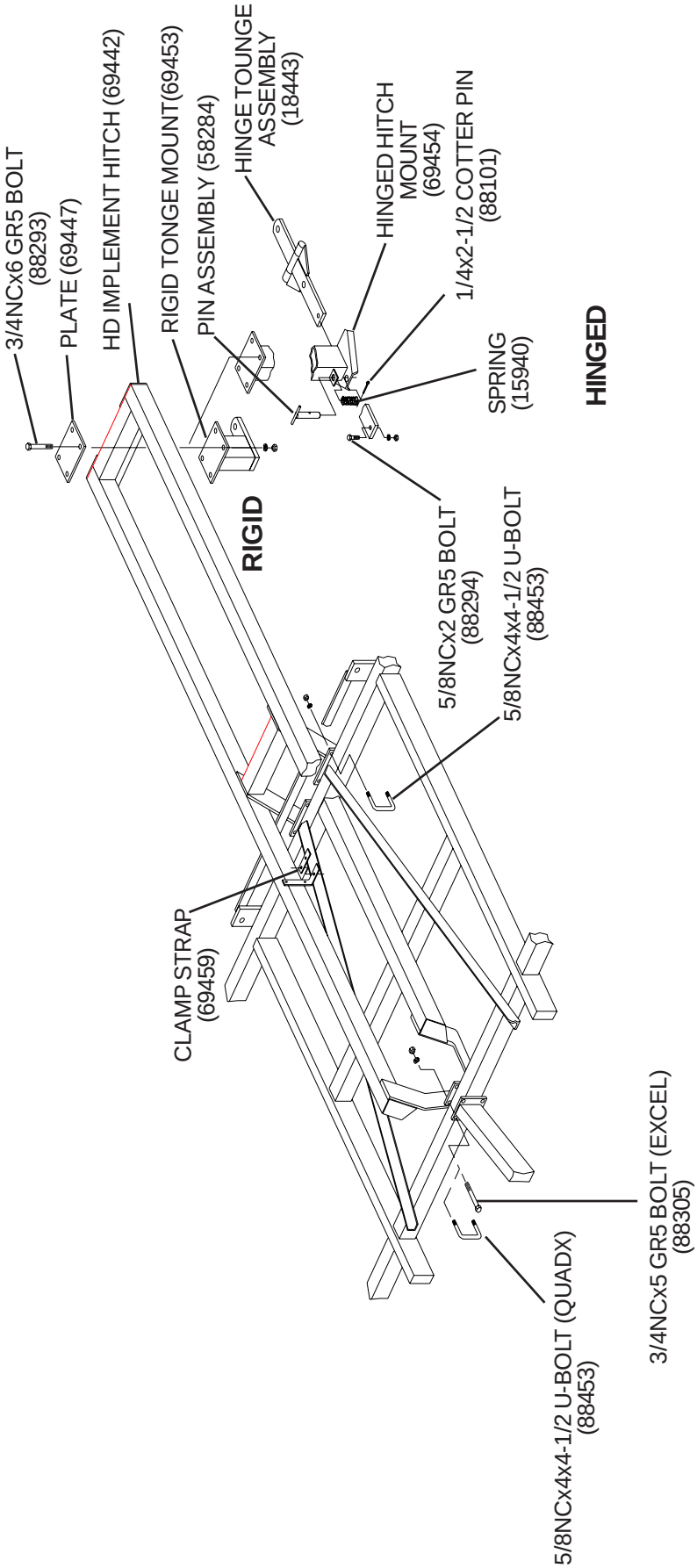

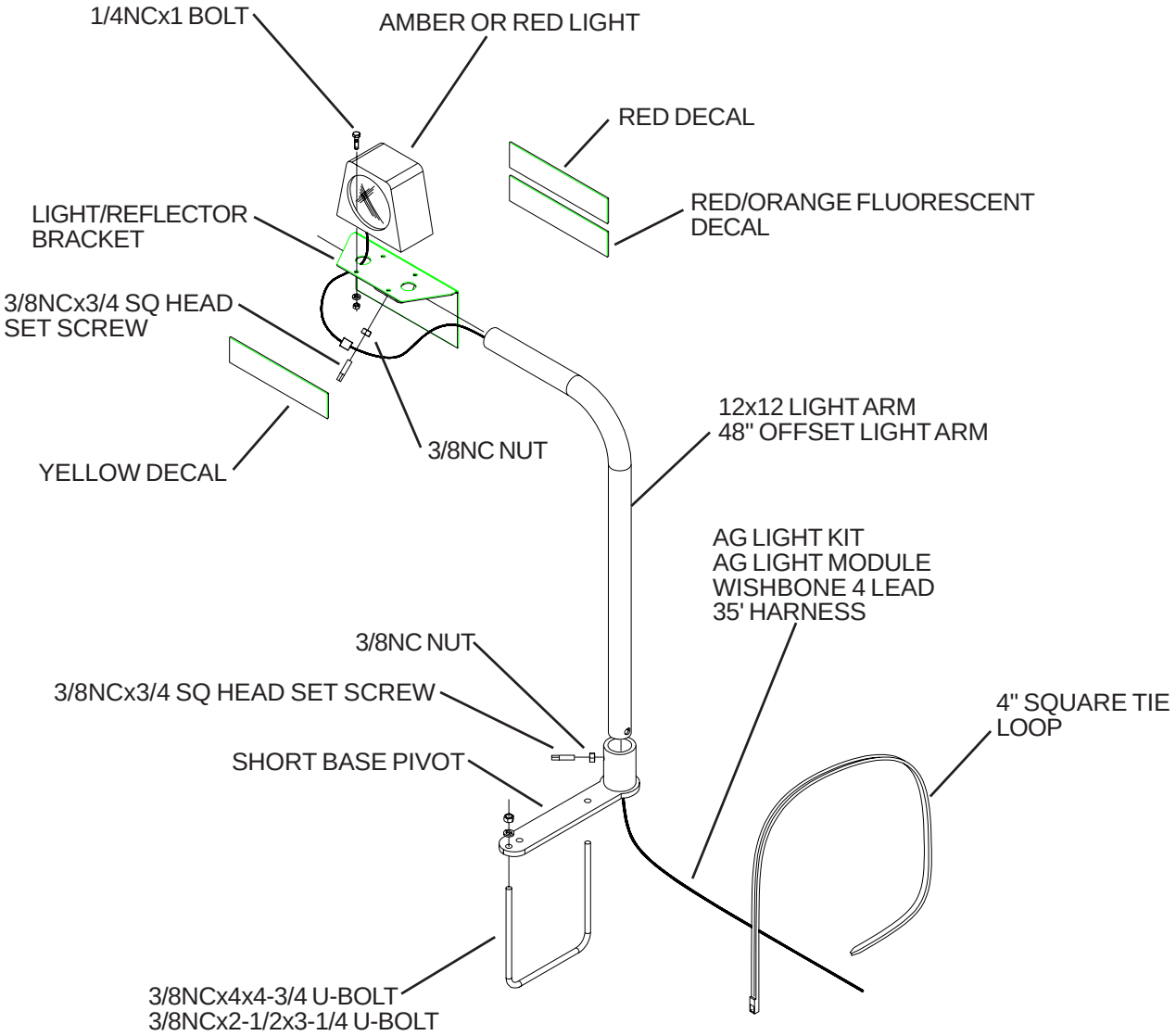
1/4NCx1 BOLT
AMBER OR RED LIGHT
RED DECAL
RED/ORANGE FLUORESCENT DECAL
LIGHT/REFLECTOR BRACKET
3/8NCx3/4 SQ HEAD SET SCREW
YELLOW DECAL
3/8NC NUT
12x12 LIGHT ARM
48" OFFSET LIGHT ARM
AG LIGHT KIT
AG LIGHT MODULE
WISHBONE 4 LEAD
35' HARNESS
3/8NC NUT
3/8NCx3/4 SQ HEAD SET SCREW
4" SQUARE TIE LOOP
SHORT BASE PIVOT
3/8NCx4x4-3/4 U-BOLT
3/8NCx2-1/2x3-1/4 U-BOLT

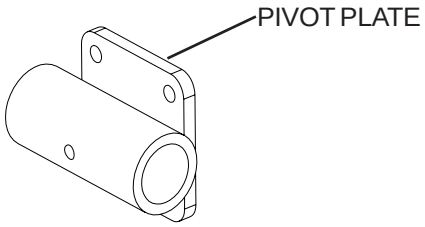
PIVOT PLATE