ASSEMBLY INSTRUCTIONS

WIL-RICH 3400 5-SECTION FIELD CULTIVATOR

WIL-RICH
PO Box 1030
Wahpeton, ND 58074
PH (701) 642-2621
Fax (701) 642-3372

Printed in USA (74061) WR-20 2/88

PERSONAL SAFETY IS *IMPORTANT!*

ALL PERSONNEL INVOLVED WITH THE ASSEMBLY AND/OR OPERATION OF THIS EQUIPMENT MUST BE INFORMED OF PROPER SAFETY PROCEDURES. OPERATOR'S AND ASSEMBLY MANUALS PROVIDE THE NECESSARY INFORMATION. IF THE MANUAL IS LOST FOR A PARTICULAR IMPLEMENT, ORDER A REPLACEMENT AT ONCE. OPERATOR'S AND ASSEMBLY MANUALS ARE AVAILABLE AT NO CHARGE UPON REQUEST.

ADDRESS INQUIRIES TO:

WIL-RICH

PO BOX 1030

WAHPETON, ND 58074

PH (701)642-2621 FAX (701)642-3372

ASSEMBLY INFORMATION

Remove all wires and arrange the parts conveniently.

NOTE: Always wear safety glasses or goggles and be careful when cutting wires and steel bands as they are under tension and will spring back when cut.

Wherever the terms "left" and "right" are used, it must be understood to mean from a position behind and facing the machine.

Lubricate all bearings and moving parts as you proceed and make sure they work freely.

Loosely install all bolts connecting mating parts before final tightening.

When tightening bolts, they must be torqued to the proper number of foot-pounds as indicated in the table unless specified. It is important that all bolts be kept tight.

On new machines, all nuts and bolts must be rechecked after a few hours of operation.

GRADE 2	GRADE 5			GRADE 8		
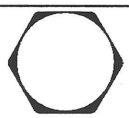				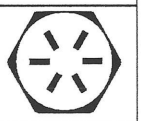		
TORQUE IN FOOT POUNDS						
BOLT DIA	3/8	1/2	5/8	3/4	7/8	1
HEX HEAD	9/16	3/4	15/16	1-1/8	1-5/16	1-1/2
UNC GR2	18	45	89	160	252	320
UNC GR5	30	68	140	240	360	544
UNC GR8	40	100	196	340	528	792
UNF GR2	21	51	102	178	272	368
UNF GR5	32	70	168	264	392	572
UNF GR8	48	112	216	368	792	840

TORQUE.EPS

When replacing a bolt, use only a bolt of the same grade or higher. Except in shear bolt applications, where you must use the same grade bolt.

Bolts with no markings are grade 2

Grade 5 bolts furnished with the machine are identified by three radial lines on the head.

Grade 8 bolts furnished with the machine are identified by six radial lines on the head.

All U-bolts are grade 5.

THIS SYMBOL USED TO CALL YOUR ATTENTION TO INSTRUCTIONS CONCERNING YOUR PERSONAL SAFETY. BE SURE TO OBSERVE AND FOLLOW THESE INSTRUCTIONS

⚠ CAUTION

FAILURE TO FOLLOW THESE INSTRUCTIONS MAY RESULT IN PERSONAL INJURY AND/OR EQUIPMENT DAMAGE.

- **Just before and during operation be sure no one is on or around the implement.**
- **Before activating the hydraulic system, check hoses for proper connections.**
- **Before lowering the wings for the first time, make sure the entire system has been charged with oil.**
- **Remove and store the wing lock pins before lowering wings.**
- **With wings down always install hydraulic cylinder channel lock(s) for transporting.**

22126

49165.EPS

13' OR 17' MAIN FRAME

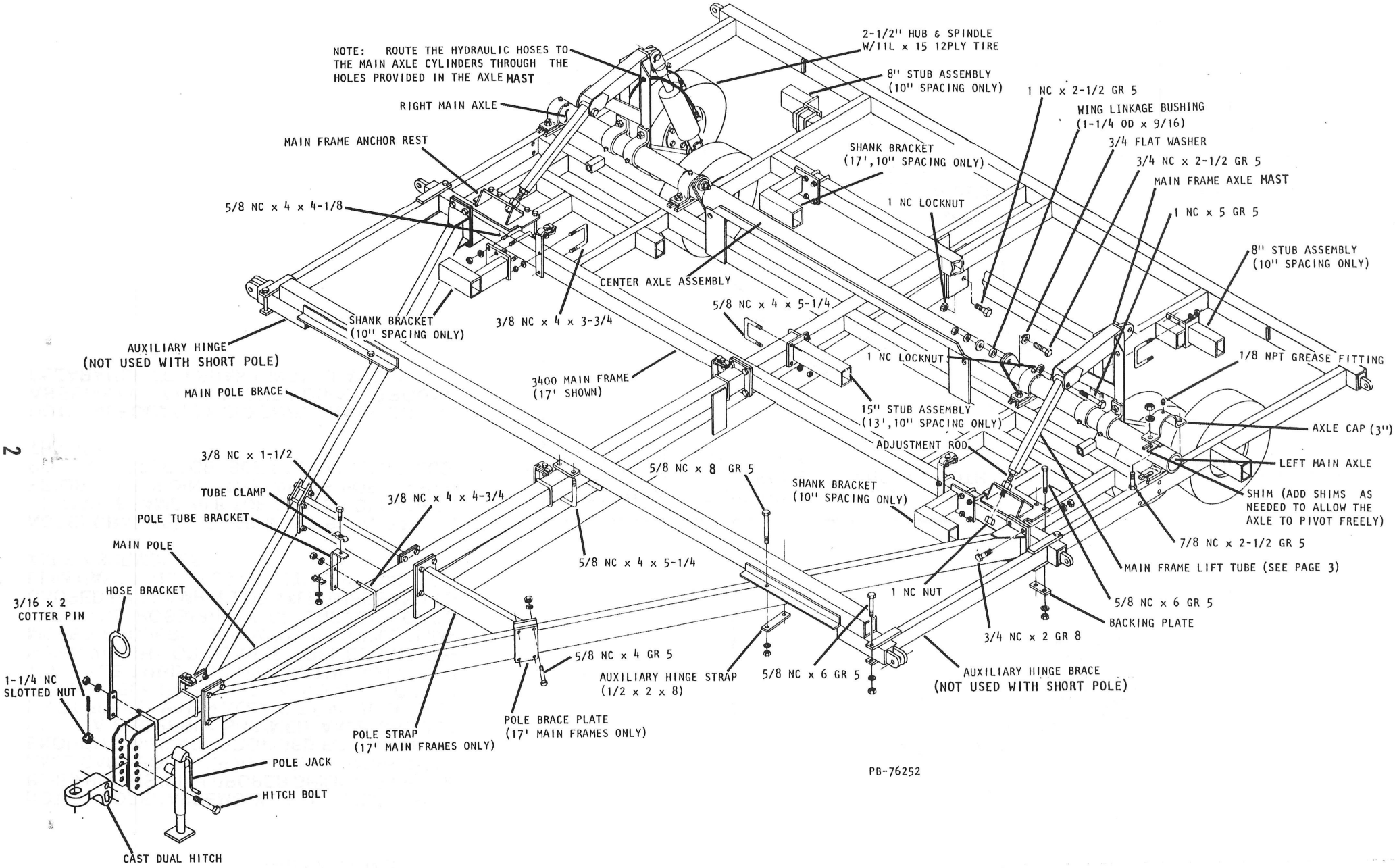

SEE MAIN AXLE ADJUSTMENT AND MAIN FRAME NOTES - PAGE 3

MAIN FRAME NOTES: 13' OR 17' MAIN FRAME

NOTE: PROPER ASSEMBLY OF ALL AXLE ASSEMBLIES BEGINS WITH PROPER SHIMMING OF THE AXLE CAP ABOUT THE AXLE TUBE. MORE THAN ENOUGH SHIMS ARE PROVIDED FOR THIS PURPOSE. A PROPERLY SHIMMED AXLE SHOULD PIVOT FREELY WHEN ALL AXLE CAP BOLTS ARE COMPLETELY TIGHTENED WITHOUT ALLOWING THE AXLE TUBE TO SHIFT IN THE AXLE CAP WHEN WEIGHT OR LOAD IS APPLIED AND REMOVED. PROPERLY SHIMMED AXLES WILL ELIMINATE THE POSSIBILITY OF UNEVEN LOADS CAUSED BY CLAMPING OF AXLE TUBES AND TO ELIMINATE UNNECESSARY STRESS LOADS ON AXLE ASSEMBLIES.

NOTE: CHANNEL LOCKS MUST BE INSTALLED ON MAIN FRAME 10.8 TOP BYPASS CYLINDERS PRIOR TO FOLDING THE WINGS FOR TRANSPORT OR STORAGE. SEE HYDRAULICS ILLUSTRATION.

NOTE: ADEQUATELY SUPPORT FRAME DURING ASSEMBLY. (ALLOW SUFFICIENT GROUND CLEARANCE FOR SHANK INSTALLATION).

2-1/2" HUB & SPINDLE

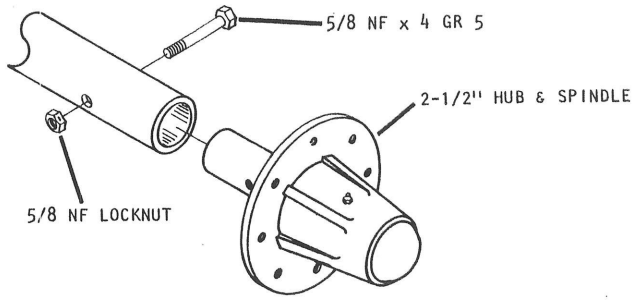

PI-75879

NOTE: TURN THE ADJUSTMENT RODS ON THE MAIN FRAME AXLE ASSEMBLIES AND SET BOTH TO THE DIMENSION SHOWN.

MAIN AXLE ADJUSTMENT

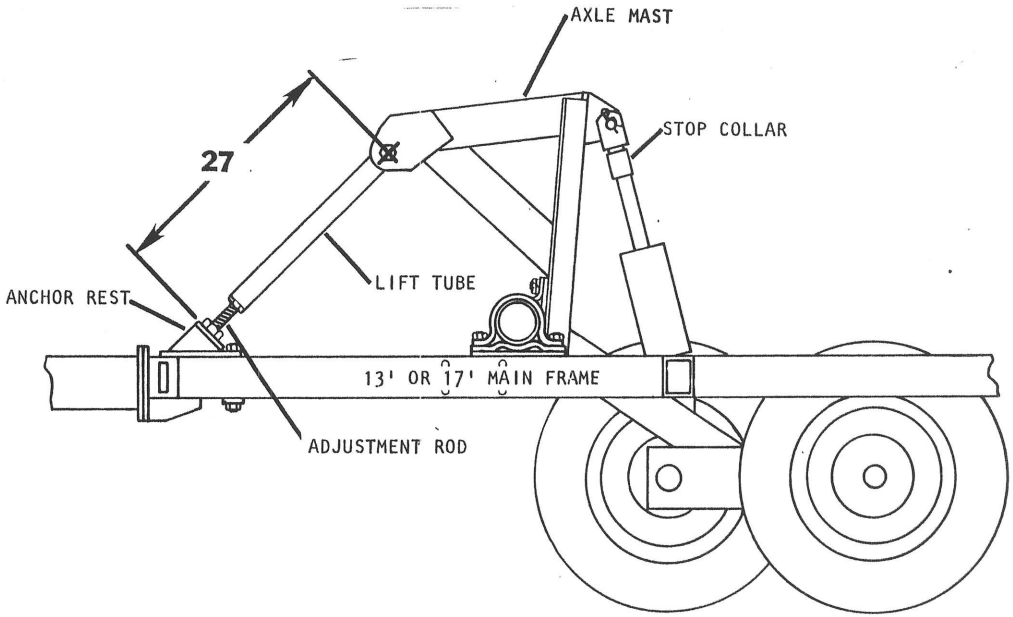

PI-75878

WING LOCK

NOTE: ALL WING STOPS AND THE WING LOCK MUST BE POSITIONED SECURELY BEFORE RAISING THE WINGS. INSTALL WING LOCK PINS FOR ROAD TRAVEL.

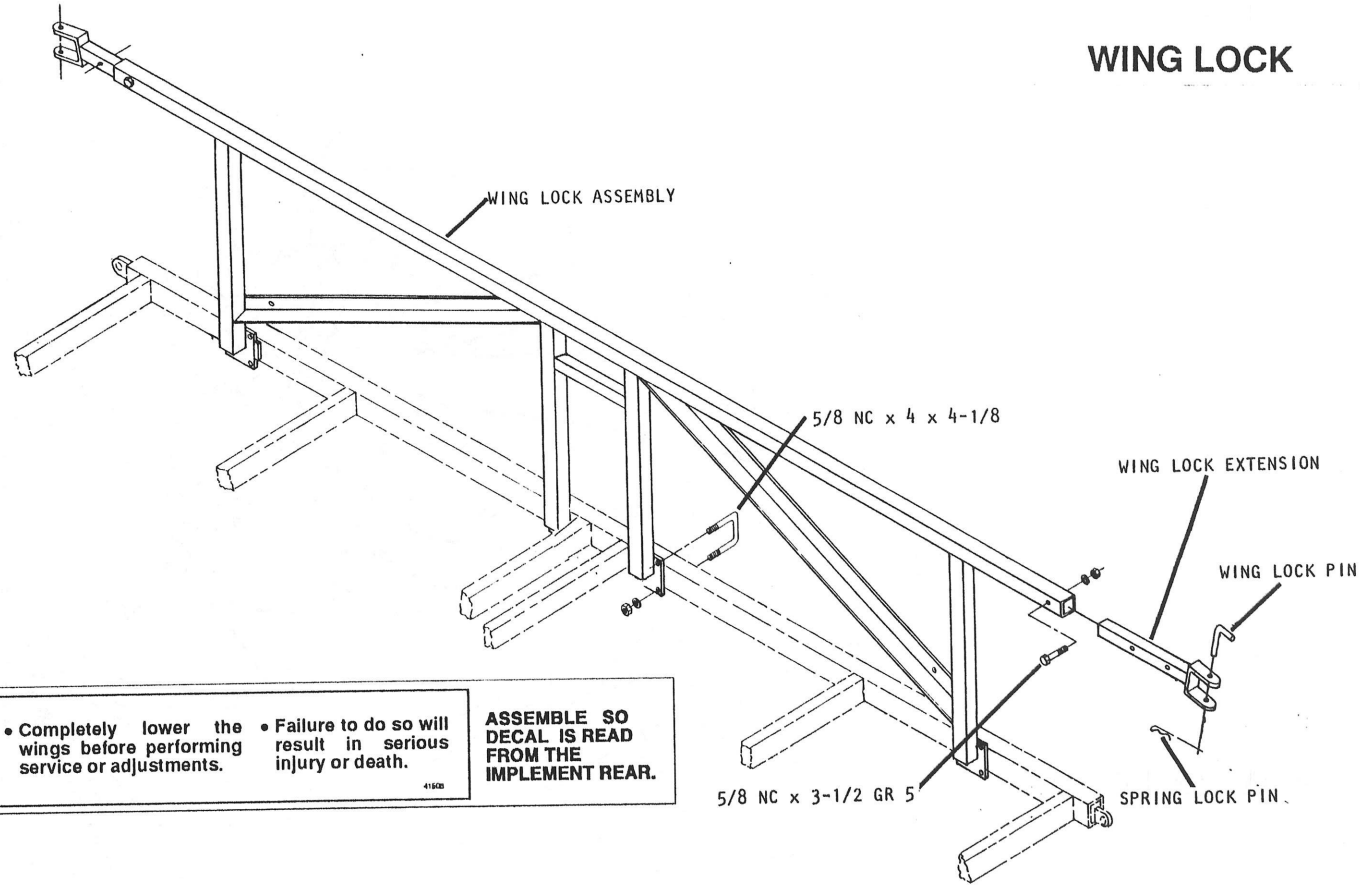

PI-75881

WING FOLD

DANGER

STAND CLEAR AT ALL TIMES:

- Never walk or stand in the path of the wings.
- Completely lower the wings before performing service or adjustments.
- Failure to do so will result in serious injury or death.

ASSEMBLE SO DECAL IS READ FROM THE IMPLEMENT REAR.

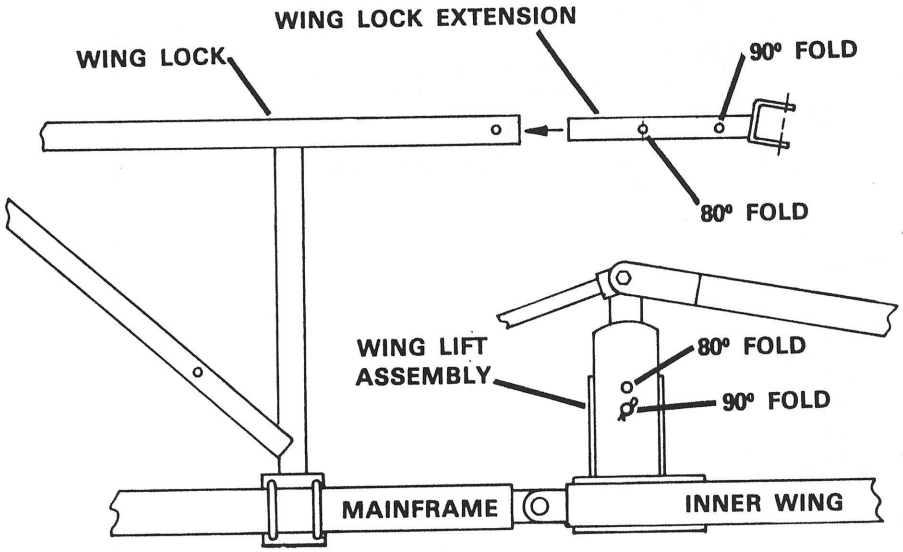

AS VIEWED FROM REAR

PI-75885

TWO HOLES ARE PROVIDED IN EACH WING LOCK EXTENSION AND LIFT ASSEMBLY TO PROVIDE THE OPTION OF FOLDING THE INNER WINGS EITHER 80° OR 90°.
THE FOLLOWING MODELS, BECAUSE OF THE LARGE OUTER WINGS, WILL NOT FOLD TO 90°.

13 FCW 47
13 FCW 47-48
13 FCW 51
13 FCW 51-52
13 FCW 54
13 FCW 54-55
17 FCW 58-59
17 FCW 61
17 FCW 61-62
17 FCW 65
17 FCW 66

ON THESE MODELS THE WING LOCK EXTENSIONS AND LIFT ASSEMBLIES MUST BE SET UP FOR AN 80° FOLD. (ALL OTHER MODELS WILL FOLD TO 90°)

DANGER

STAND CLEAR AT ALL TIMES. NEVER WALK OR STAND IN THE PATH OF THE WINGS. COMPLETELY LOWER WINGS BEFORE PERFORMING SERVICE OR ADJUSTMENTS. FAILURE TO DO SO CAN RESULT IN SERIOUS INJURY OR DEATH. 41508

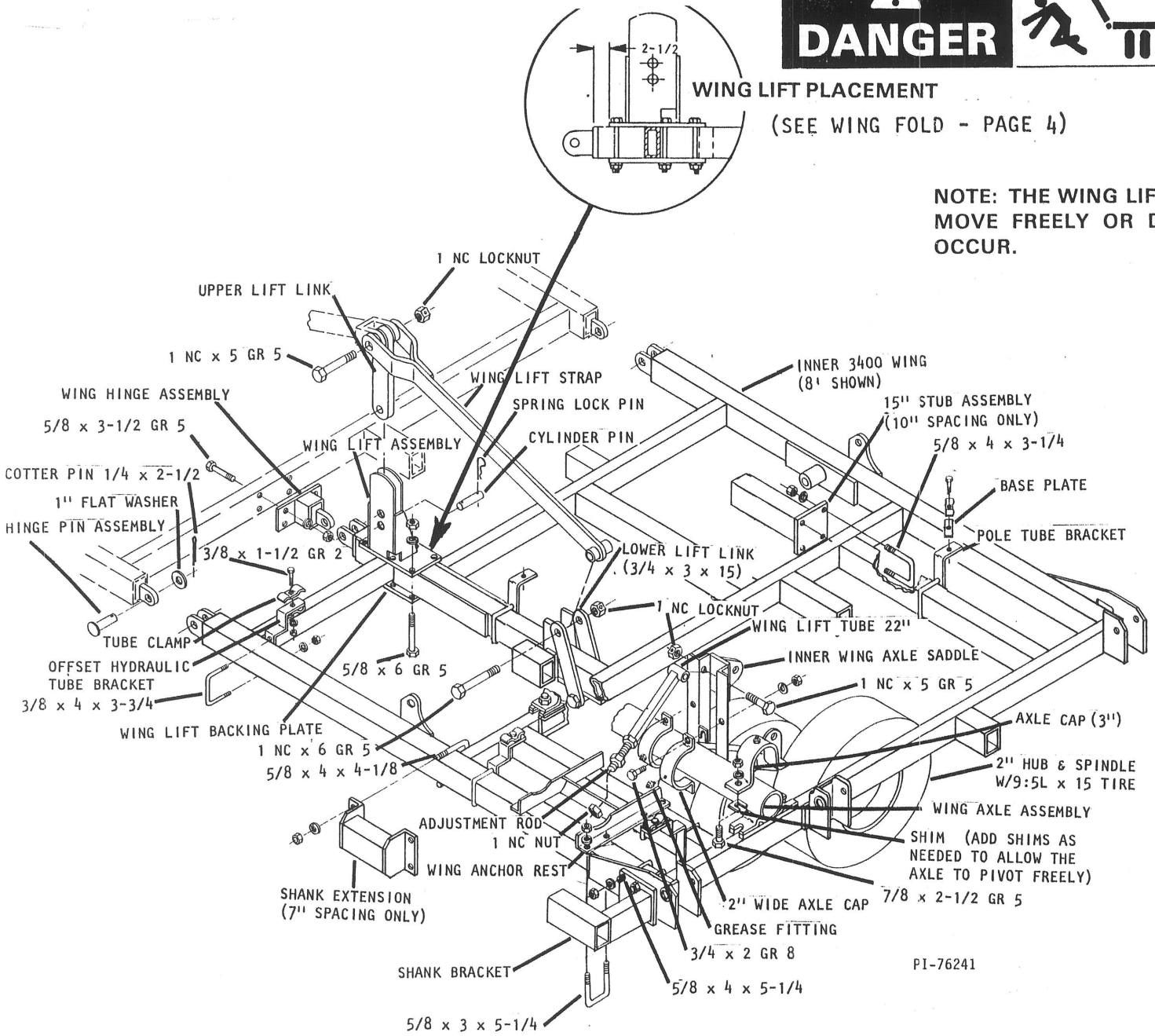

NOTE: THE WING LIFT LINKS MUST MOVE FREELY OR DAMAGE WILL OCCUR.

8' INNER WING

PI-76349

13-1/2', 11-1/2', & 10' INNER WING

NOTE: THE WING LIFT LINKS MUST MOVE FREELY OR DAMAGE WILL OCCUR.

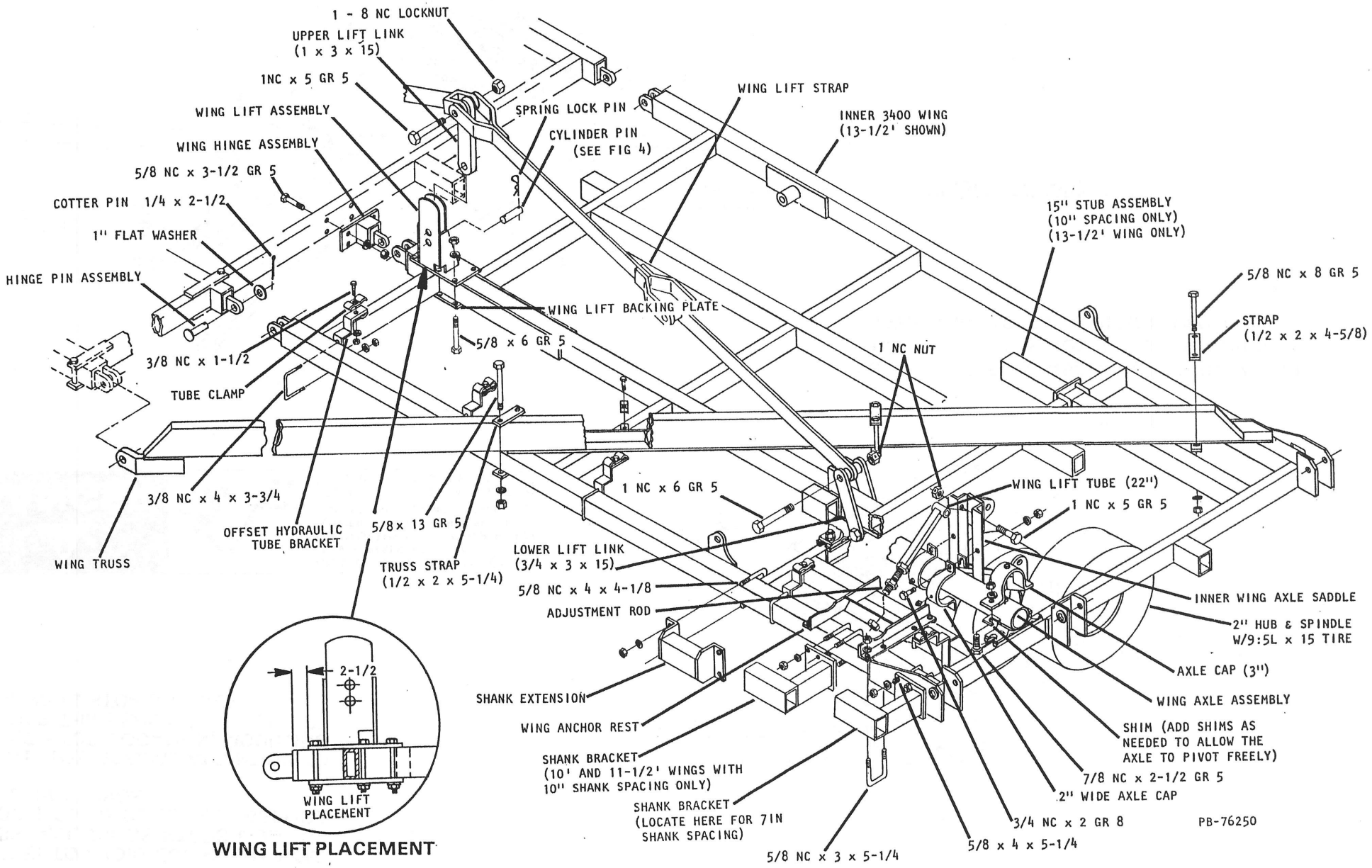

WING LIFT PLACEMENT

PI-76349

5' OUTER WING STOP

NOTE: TO AVOID EQUIPMENT DAMAGE, ALL WINGS STOPS MUST BE POSITIONED SECURELY BEFORE FOLDING WINGS.

NOTE: PAY SPECIAL ATTENTION TO WING STOP LOCATION, MOUNTING OTHER THAN SHOWN WILL EFFECT THE WING STOP CONTACT.

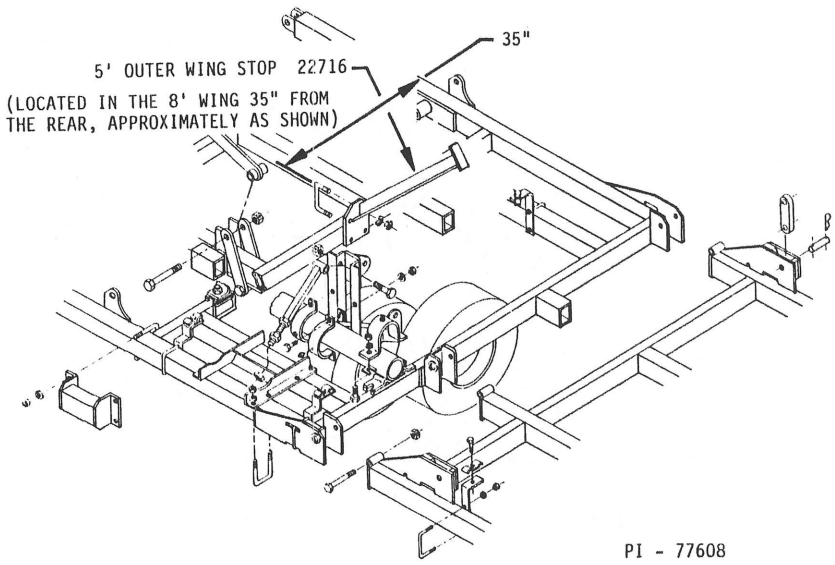

NOTE: WING STOP ASSEMBLY IS SHOWN HERE FOR CLARITY. IT IS NOT REPEATED NOR SHOWN ON THE WING ASSEMBLY ILLUSTRATIONS.

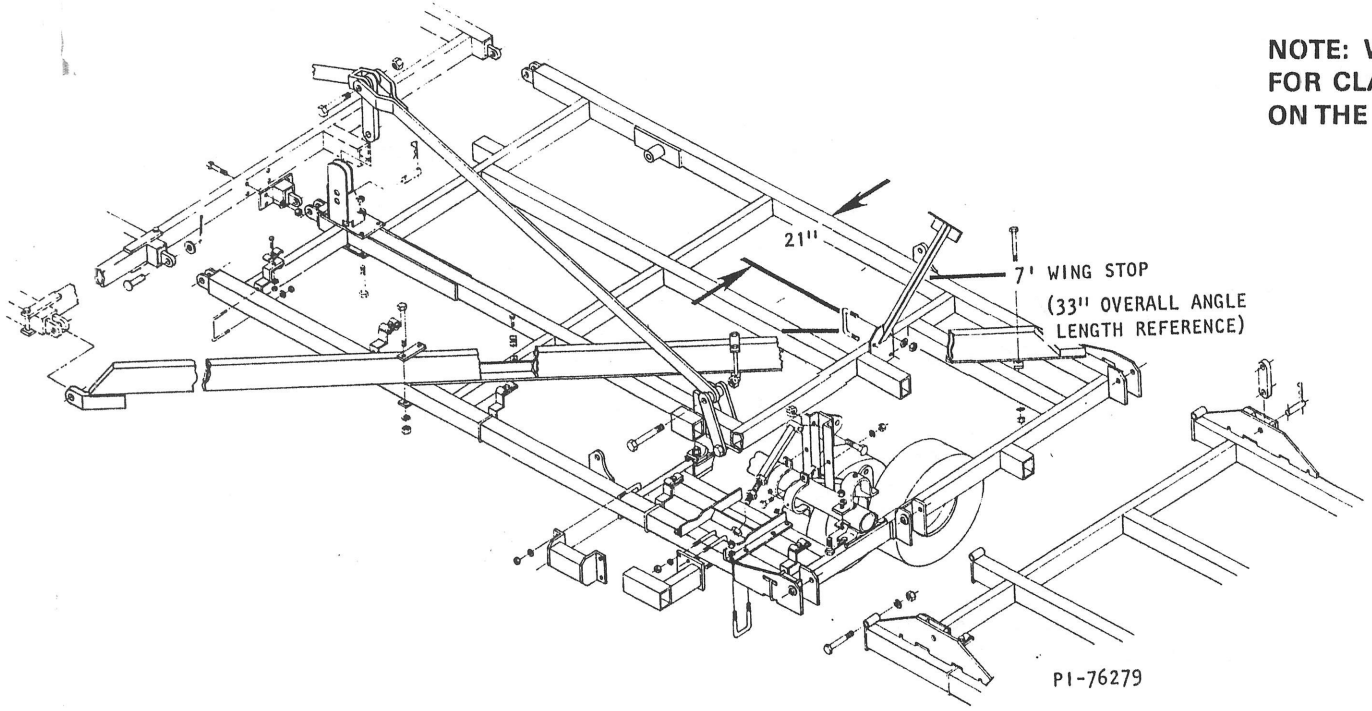

7' OUTER WING STOP

NOTE: TO AVOID EQUIPMENT DAMAGE, ALL WINGS STOPS MUST BE POSITIONED SECURELY BEFORE FOLDING WINGS.

NOTE: PAY SPECIAL ATTENTION TO WING STOP LOCATION, MOUNTING OTHER THAN SHOWN WILL EFFECT THE WING STOP CONTACT.

9' OUTER WING STOP

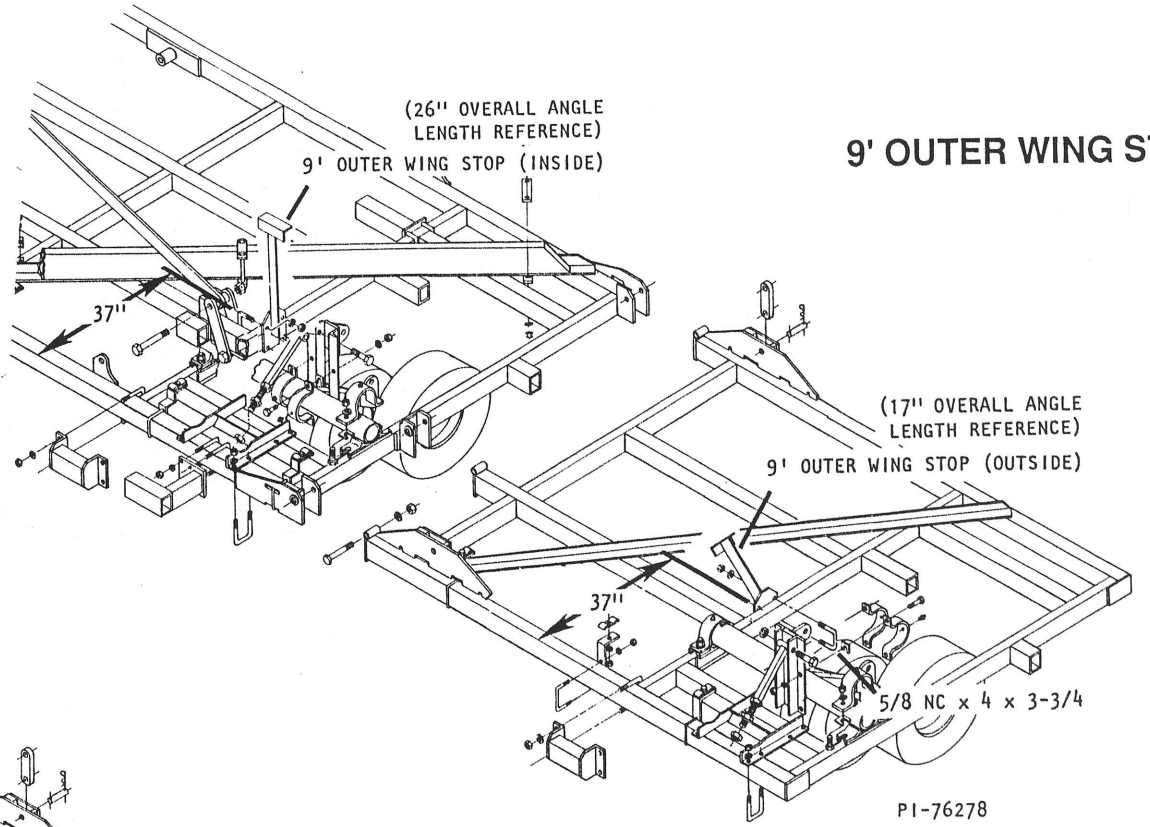

10-1/2' OUTER WING STOP

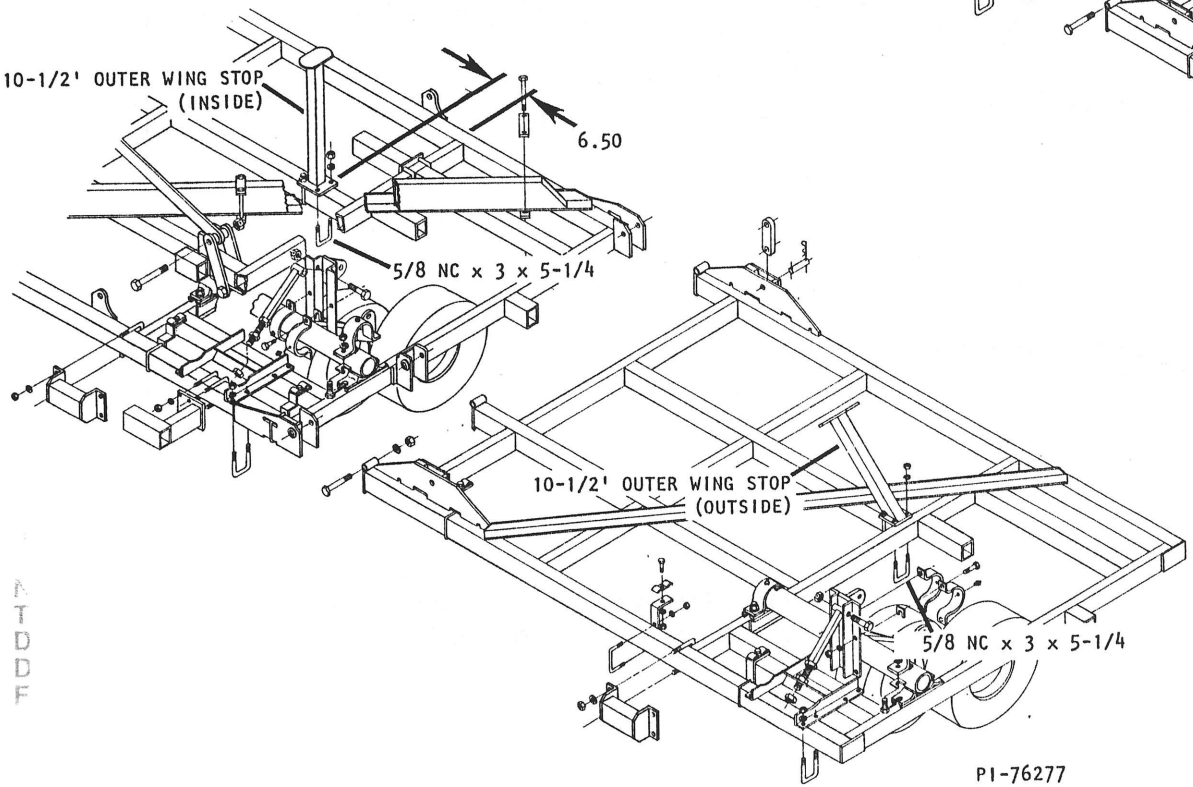

NOTE: WING STOP ASSEMBLY IS SHOWN HERE FOR CLARITY. IT IS NOT REPEATED NOR SHOWN ON THE WING ASSEMBLY ILLUSTRATIONS.

1-3/4" HUB & SPINDLE

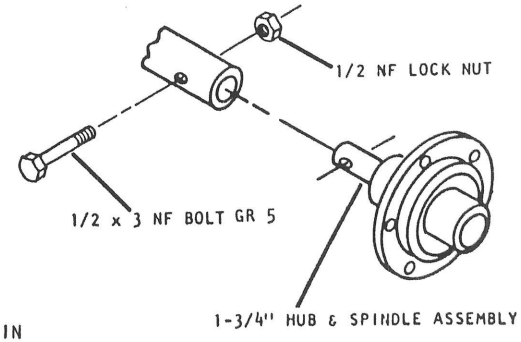

PI-75660

NOTE: THE WING LIFT LINKS MUST MOVE FREELY OR DAMAGE WILL OCCUR.

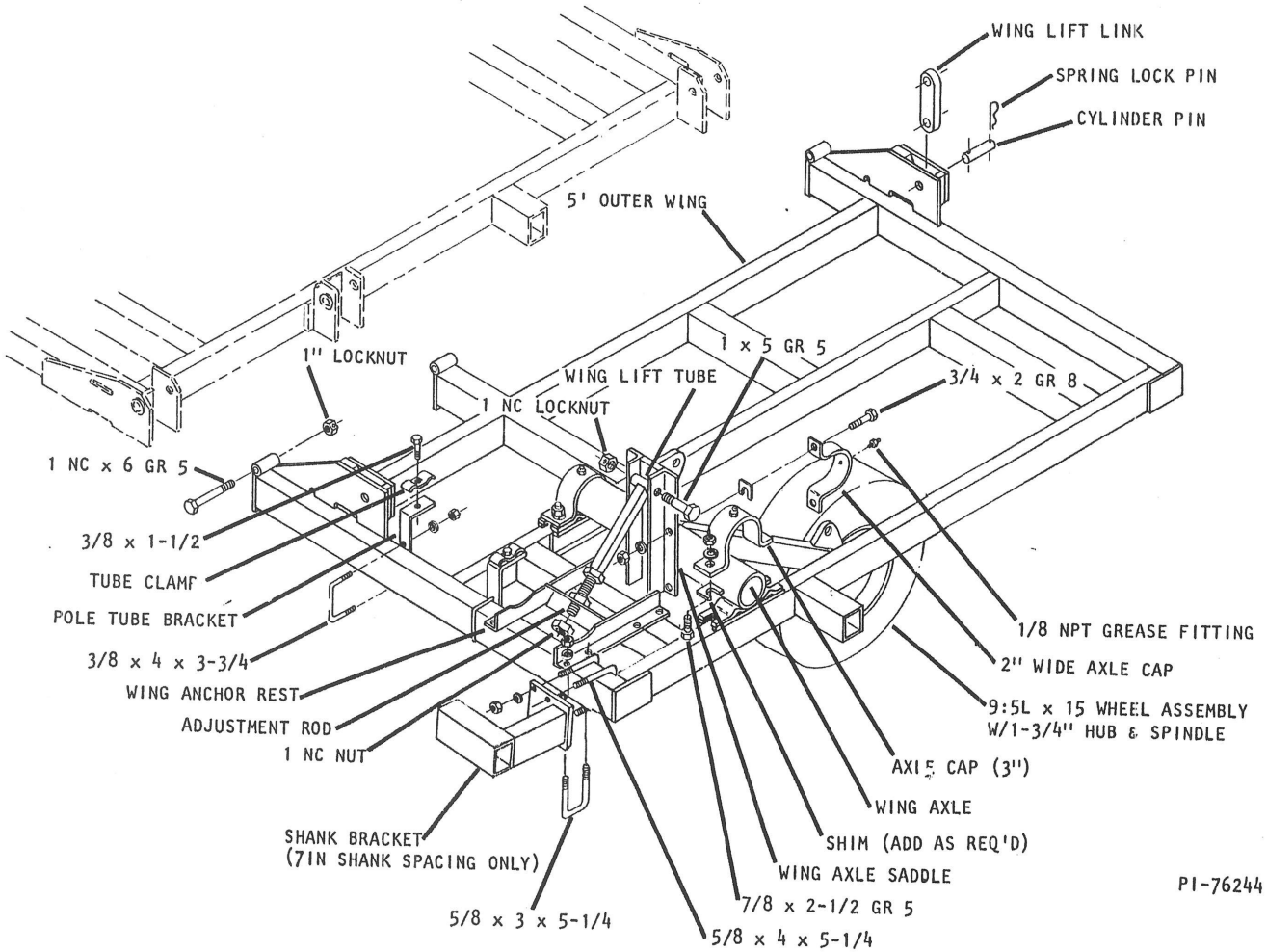

PI-76244

5-1/2' OUTER WING

PI-76349

10-1/2', 9', & 7' OUTER WING

DANGER

STAND CLEAR AT ALL TIMES. NEVER WALK OR STAND IN THE PATH OF THE WINGS. COMPLETELY LOWER WINGS BEFORE PERFORMING SERVICE OR ADJUSTMENTS. FAILURE TO DO SO CAN RESULT IN SERIOUS INJURY OR DEATH. 41508

NOTE: THE WING LIFT LINKS MUST MOVE FREELY OR DAMAGE WILL OCCUR.

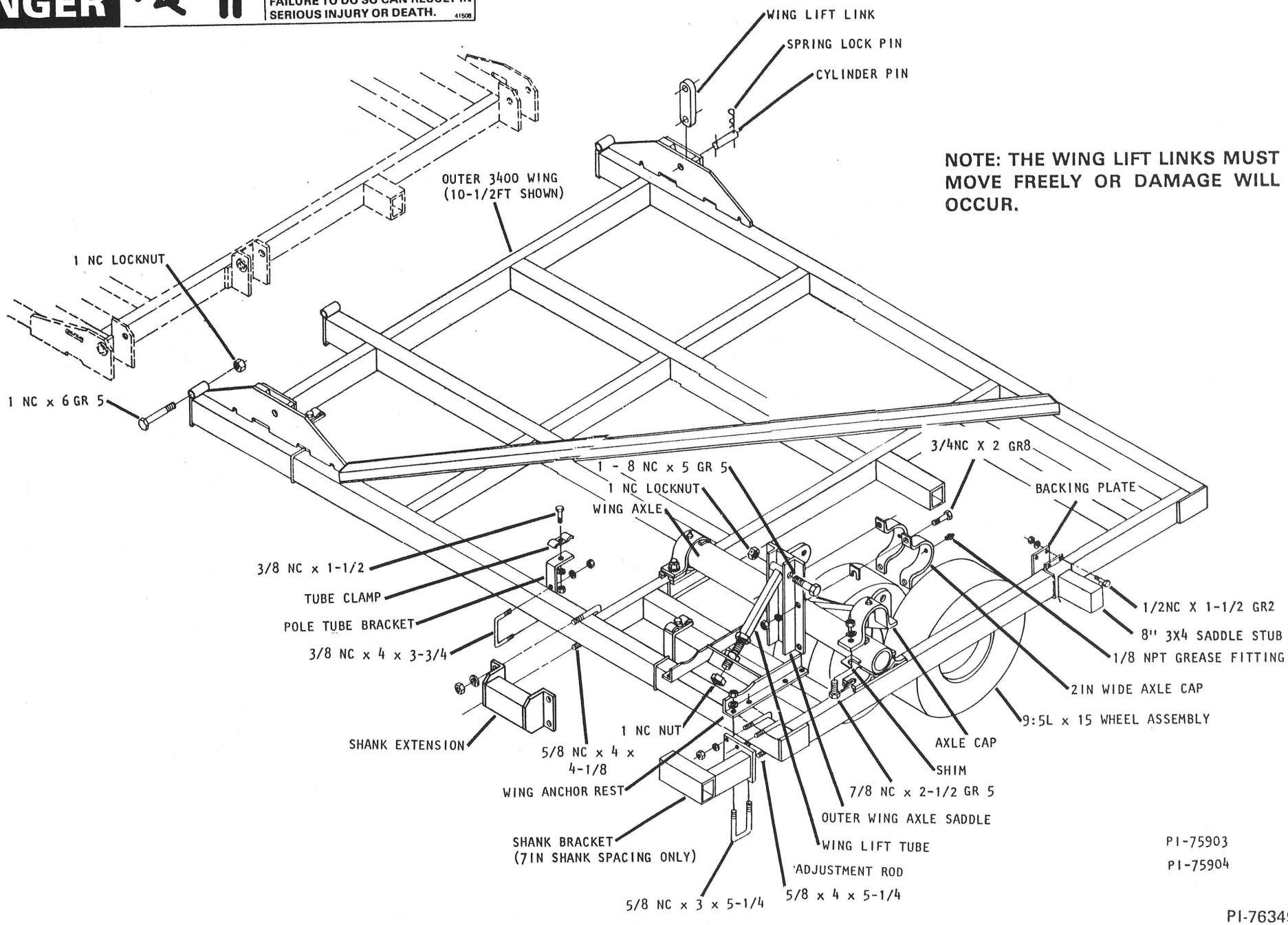

STABILIZER WHEEL ASSEMBLY

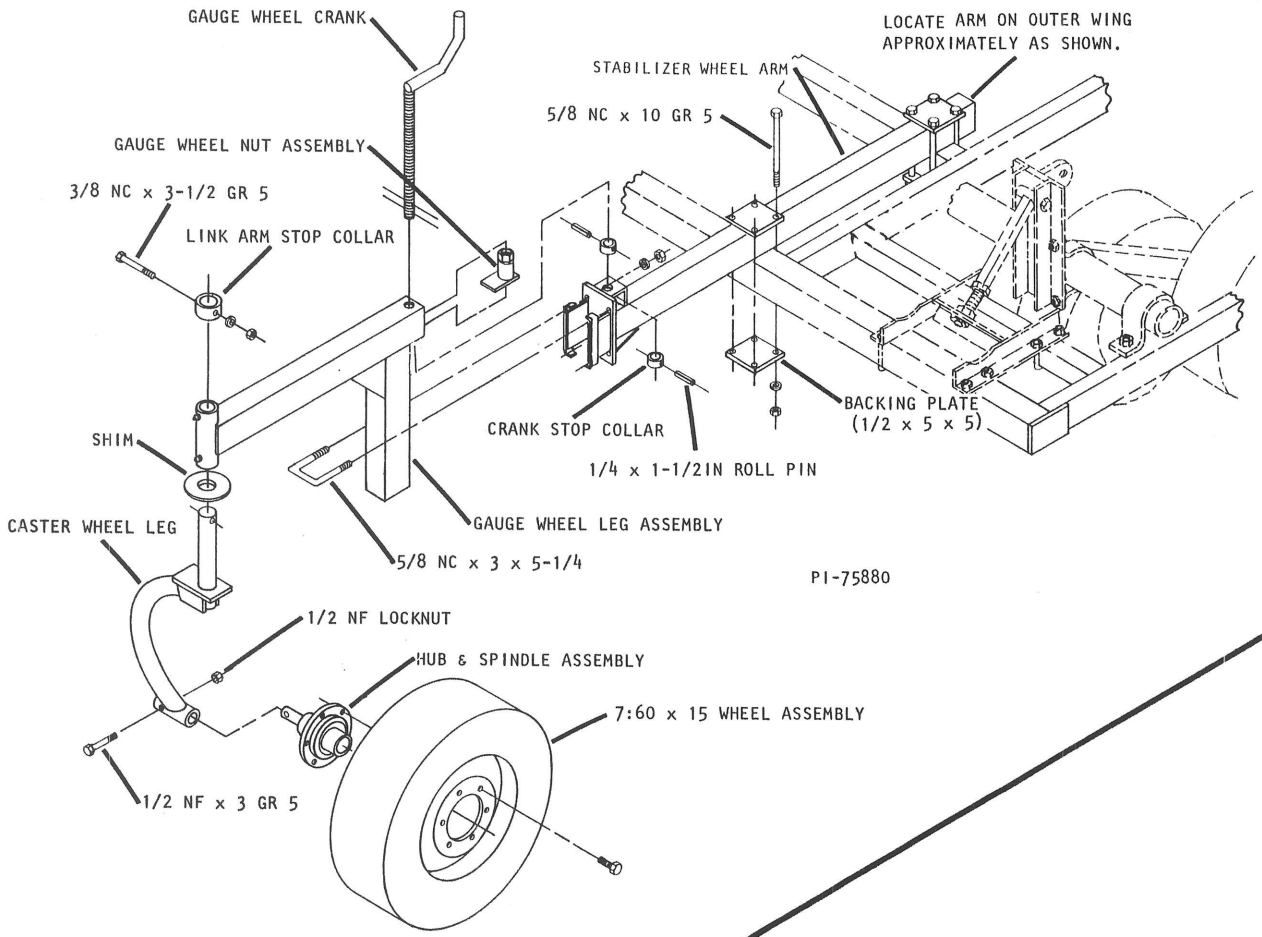

15" WING EXTENSION STUB

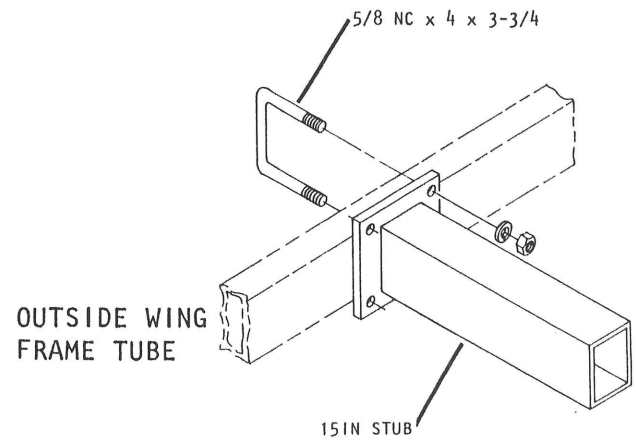

PI-75879

HYDRAULICS
(SINGLE WING MODELS)

NOTE: HYDRAULIC PIPE COMPOUND SHOULD BE USED TO PREVENT LEAKAGE ON ALL PIPE THREADS (CYLINDER PORTS ONLY).

NOTE: TORQUE ALL 37° FLARE FITTINGS AND HOSES 20 TO 40 FT. LBS. DO NOT OVER TIGHTEN AS FLARES DO THE SEALING, NOT THREAD DEFORMATION.

CAUTION

FAILURE TO FOLLOW THESE INSTRUCTIONS MAY RESULT IN PERSONAL INJURY AND/OR EQUIPMENT DAMAGE.

- JUST BEFORE AND DURING OPERATION BE SURE NO ONE IS ON OR AROUND THE IMPLEMENT.
- BEFORE ACTIVATING THE HYDRAULIC SYSTEM, CHECK HOSES FOR PROPER CONNECTIONS.
- BEFORE LOWERING THE WINGS FOR THE FIRST TIME, MAKE SURE THE ENTIRE SYSTEM HAS BEEN CHARGED WITH OIL.
- REMOVE AND STORE THE WING LOCK PINS BEFORE LOWERING WINGS.
- WITH WINGS DOWN, ALWAYS INSTALL HYDRAULIC CYLINDER CHANNEL LOCK(S) FOR TRANSPORTING.

22126

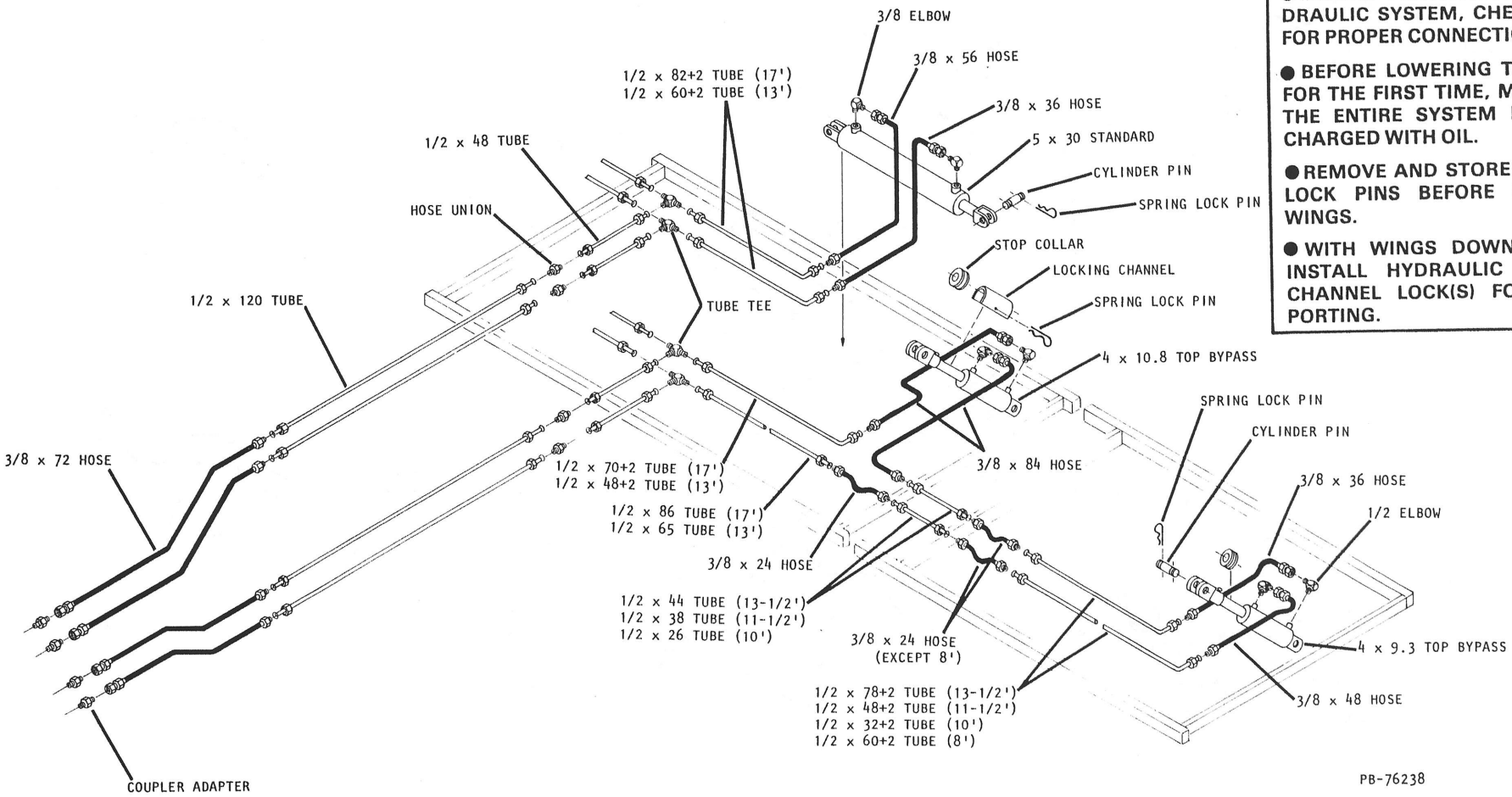

HYDRAULICS
(13' MAIN FRAME - 40'-41' MODELS)

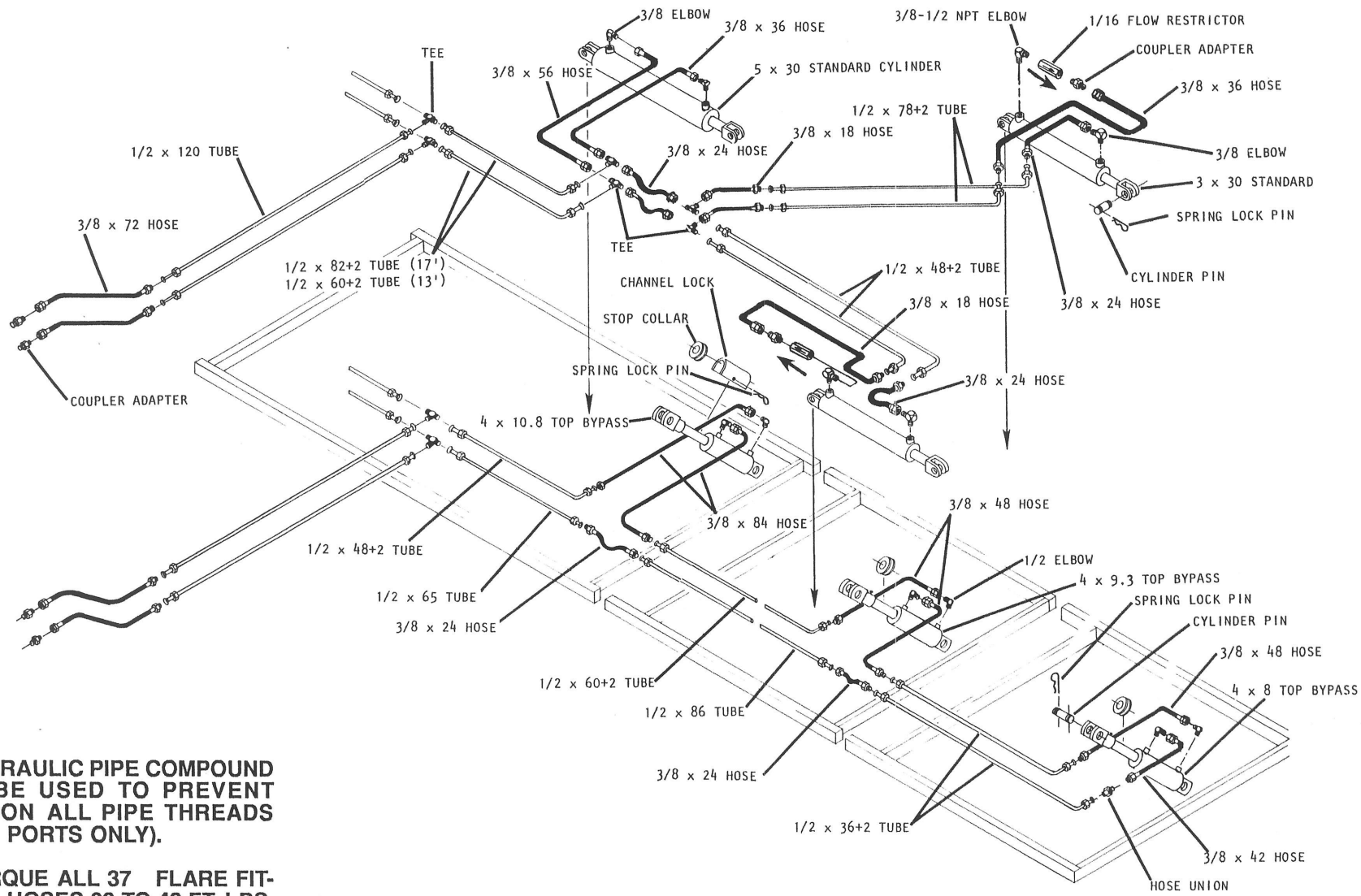

PB-76248

NOTE: HYDRAULIC PIPE COMPOUND SHOULD BE USED TO PREVENT LEAKAGE ON ALL PIPE THREADS (CYLINDER PORTS ONLY).

NOTE: TORQUE ALL 37 FLARE FITTINGS AND HOSES 20 TO 40 FT. LBS. DO NOT OVER TIGHTEN AS FLARES DO THE SEALING, NOT THREAD DEFORMATION.

CAUTION

- **FAILURE TO FOLLOW THESE INSTRUCTIONS MAY RESULT IN PERSONAL INJURY AND/OR EQUIPMENT DAMAGE.**
- **JUST BEFORE AND DURING OPERATION BE SURE NO ONE IS ON OR AROUND THE IMPLEMENT.**
- **REMOVE AND STORE WING LOCK PINS BEFORE LOWERING WINGS.**
- **NEVER FORCE THE REMOVAL OF A WING LOCK PIN. CHECK ALL HYDRAULIC AND MECHANICAL WING CONNECTIONS BEFORE REMOVING A TIGHT PIN.**
- **ALWAYS INSTALL WING LOCK PINS BEFORE TRANSPORTING OR STORING.**

22126

NOTE: TORQUE ALL 37 FLARE FITTINGS AND HOSES 20 TO 40 FT. LBS. DO NOT OVER TIGHTEN AS FLARES DO THE SEALING, NOT THREAD DEFORMATION.

HYDRAULICS (DUAL WING MODELS)

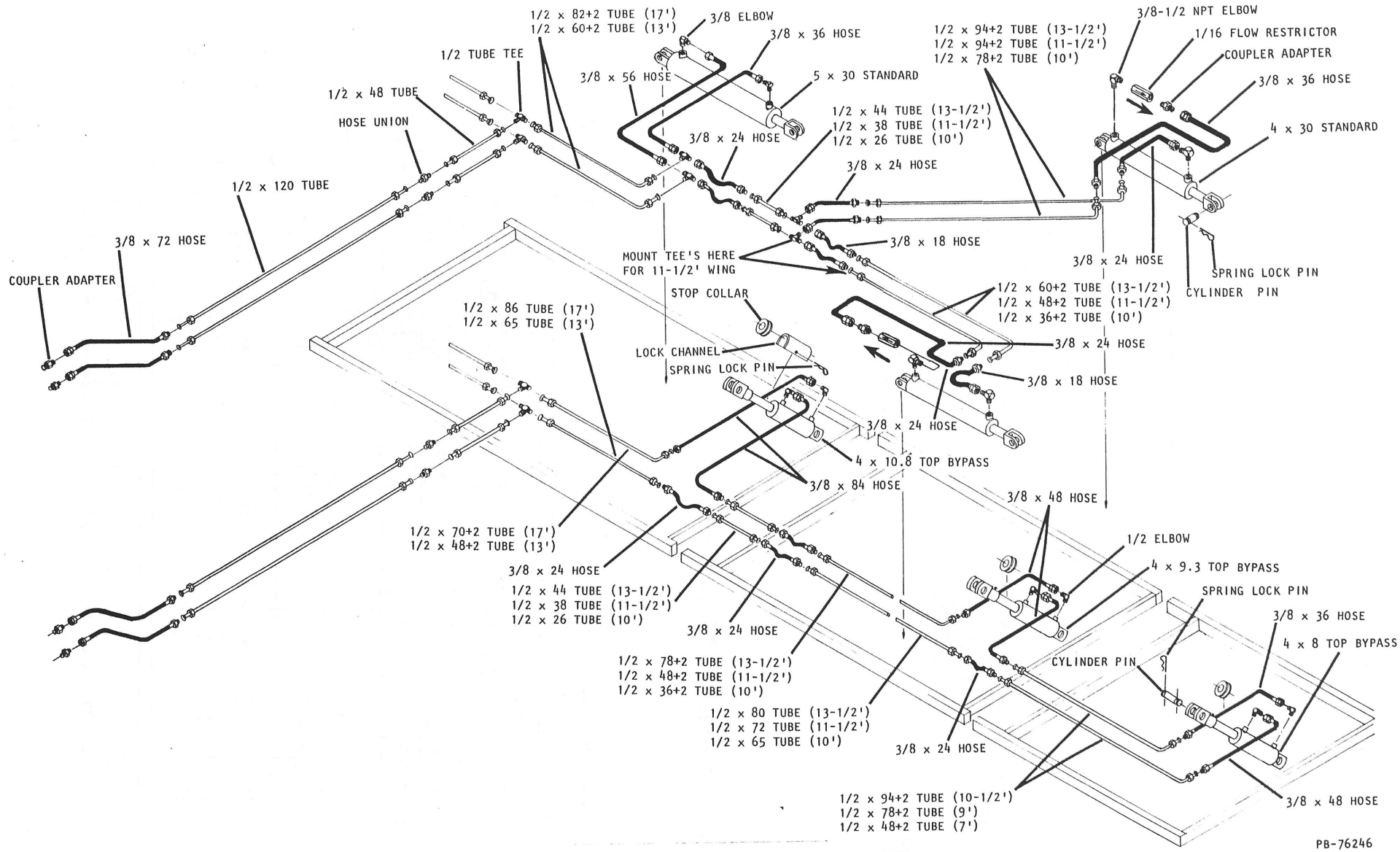

NOTE: HYDRAULIC PIPE COMPOUND SHOULD BE USED TO PREVENT LEAKAGE ON ALL PIPE THREADS (CYLINDER PORTS ONLY).

SHANK ILLUSTRATION

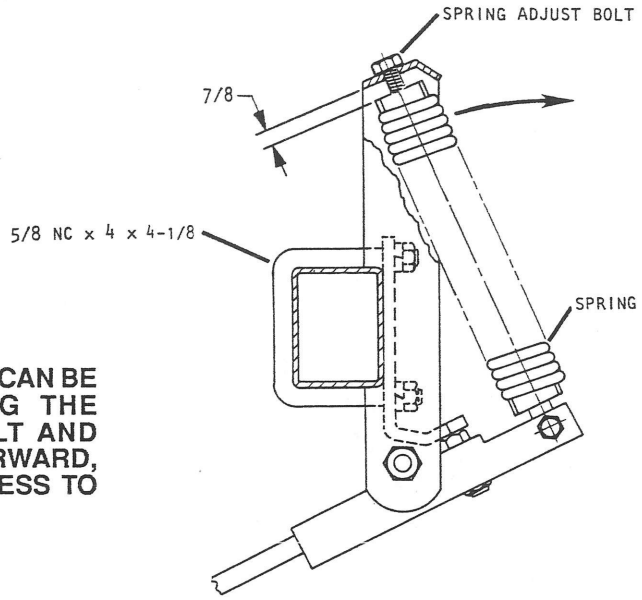

NOTE: SHANK INSTALLATION CAN BE SIMPLIFIED BY REMOVING THE SPRING ADJUSTMENT BOLT AND SWINGING THE SPRING FORWARD, THUS PROVIDING EASY ACCESS TO THE U-BOLT.

PI-75570

7 & 10 IN. SHANK PLACEMENTS

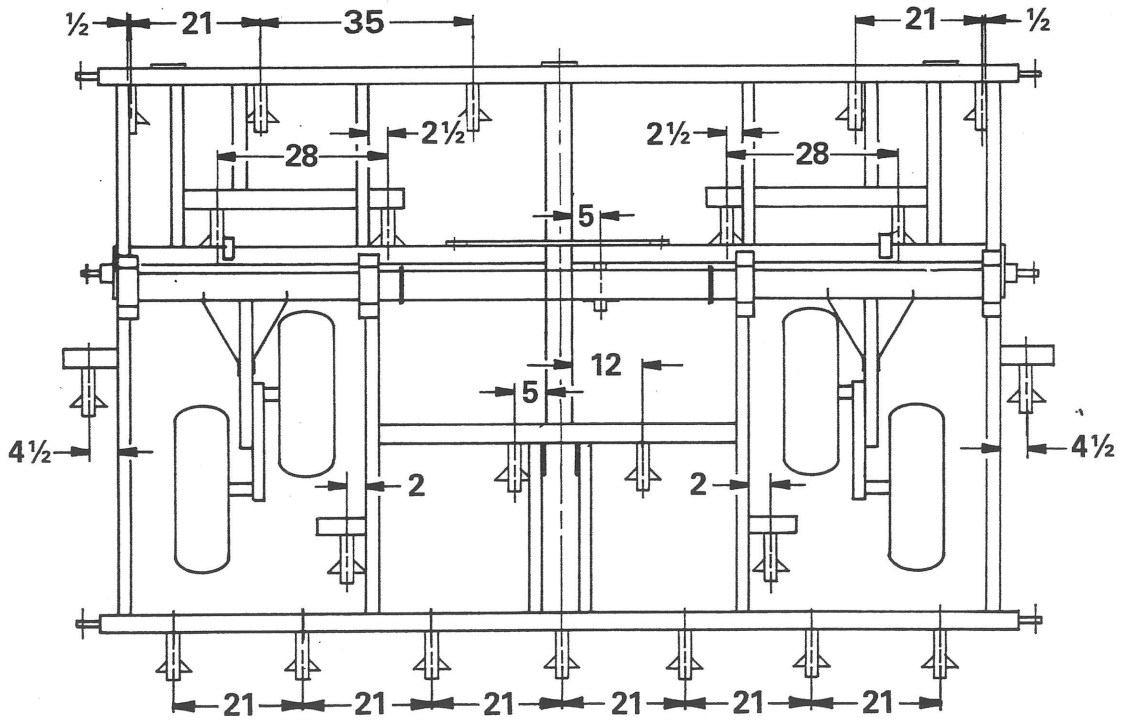

PI-75938

13' MAIN FRAME
(7" SPACING)

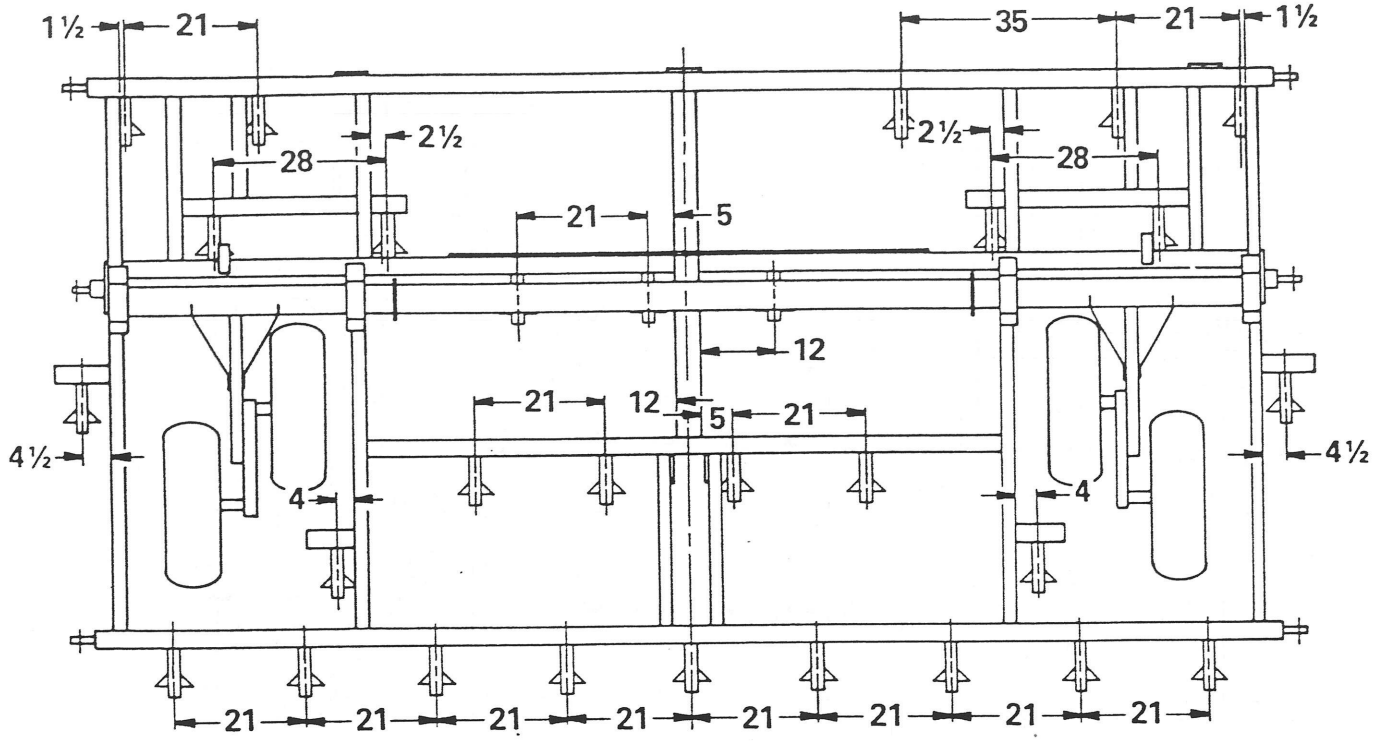

PI-75938

17' MAIN FRAME
(7" SPACING)

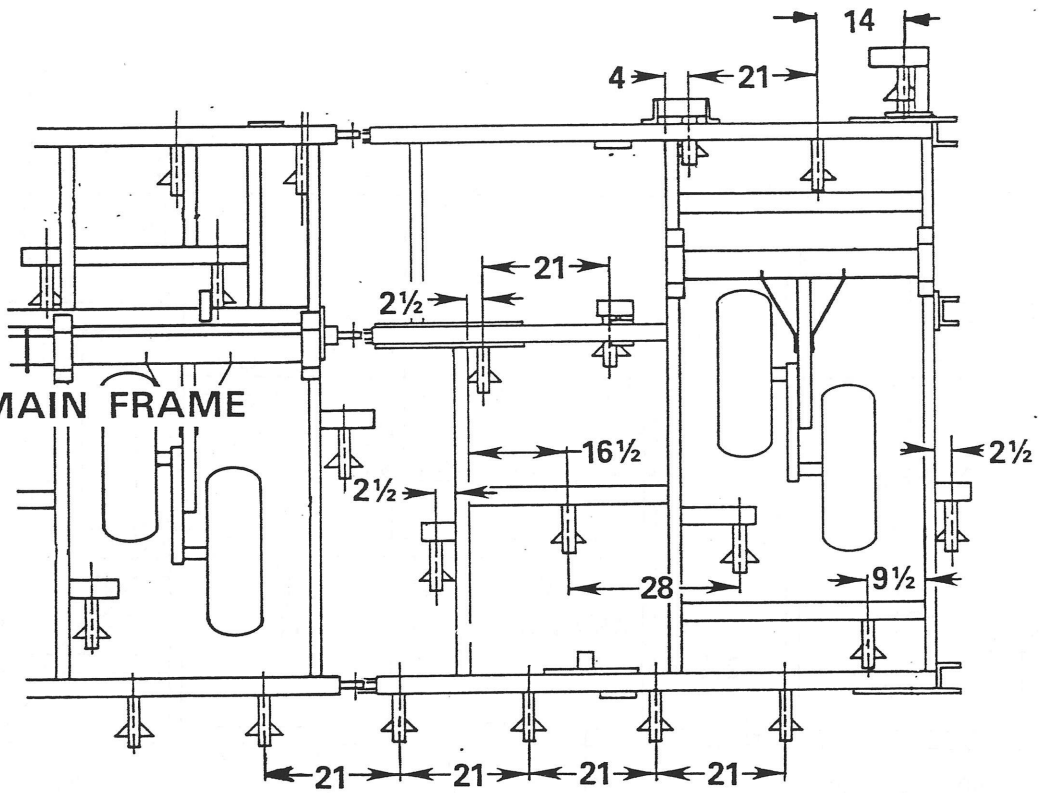

13' OR 17' MAIN FRAME

PI - 76273

8' INNER WING
(7" SPACING)

PI-76349

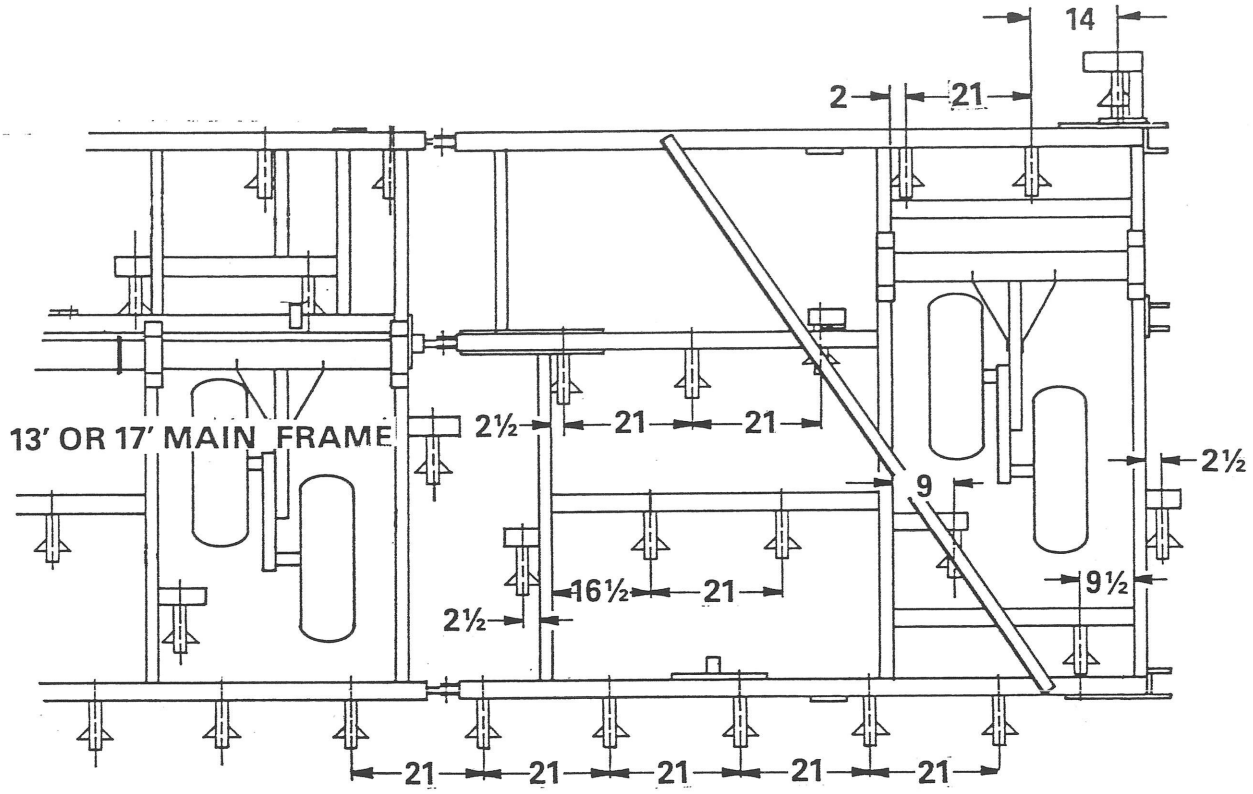

PI-75939

10' INNER WING
(7" SPACING)

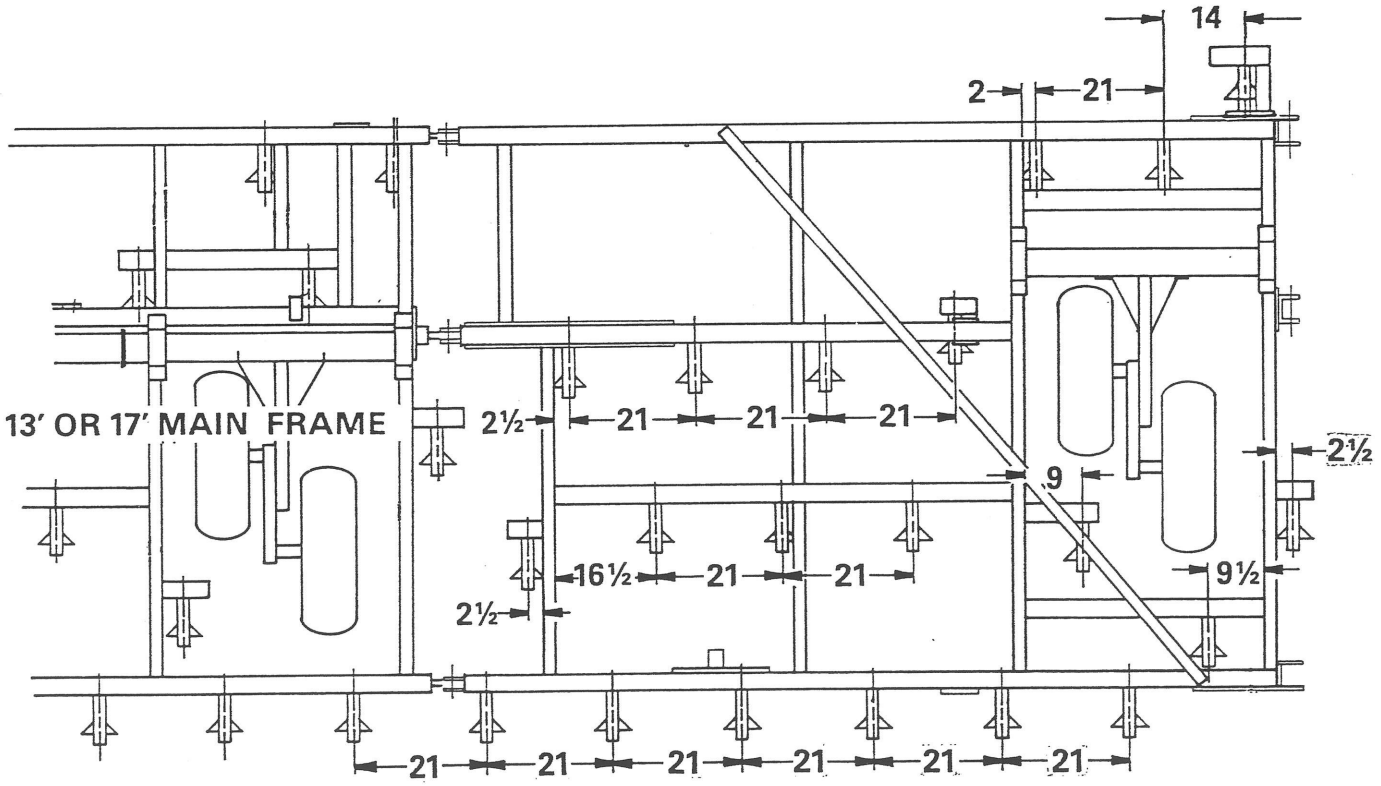

PI-75939

11-1/2' INNER WING
(7" SPACING)

PI-76349

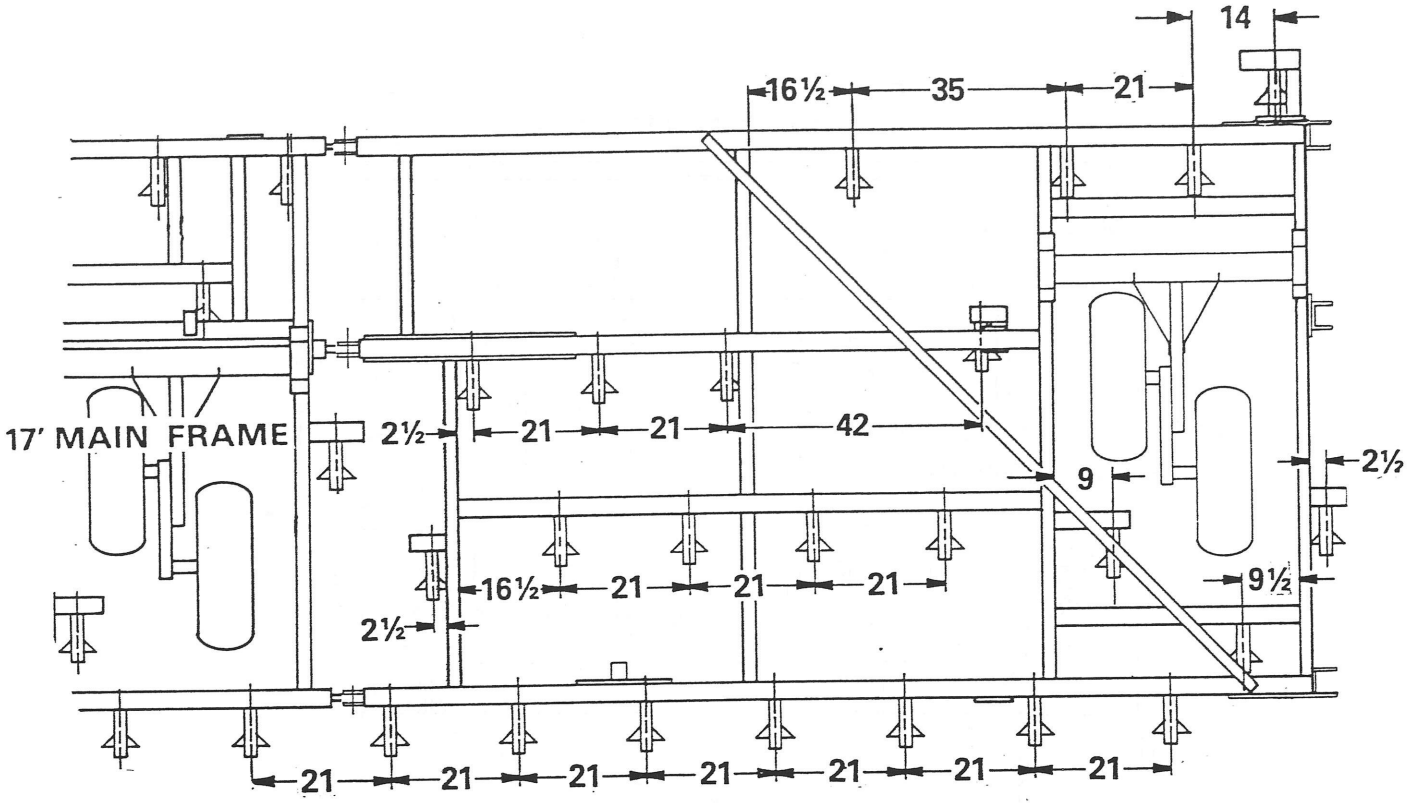

PI-75920

13-1/2' INNER WING
(7" SPACING)

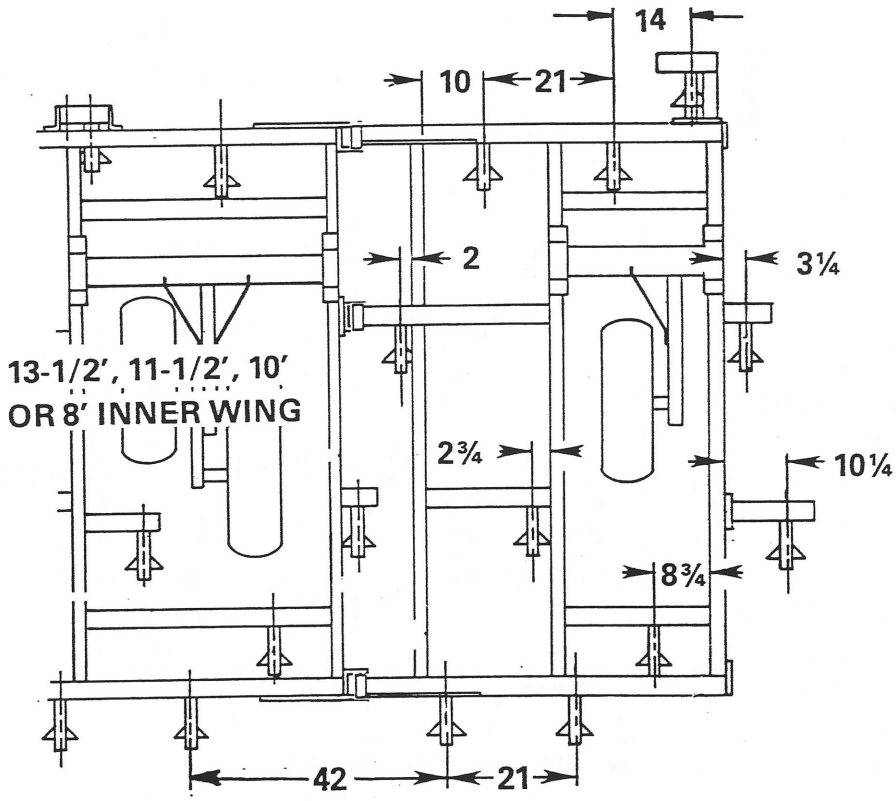

PI - 76273

5' OUTER WING
(7" SPACINGS)

PI-76349

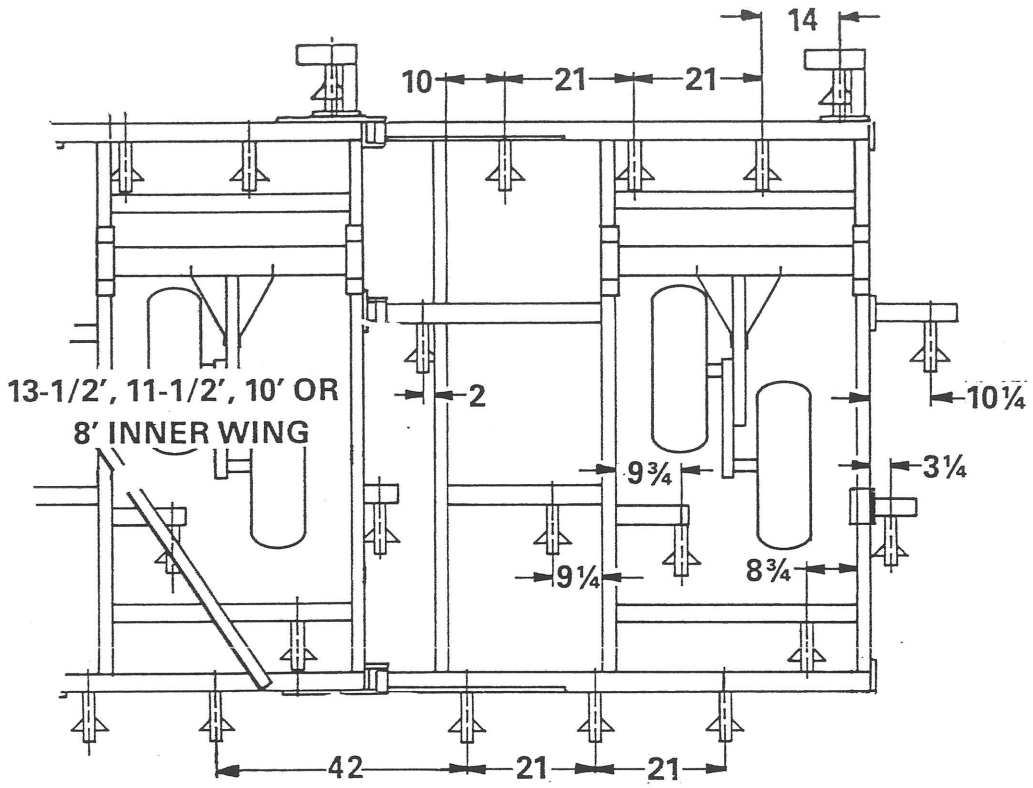

PI-75920

7' OUTER WING
(7" SPACING)

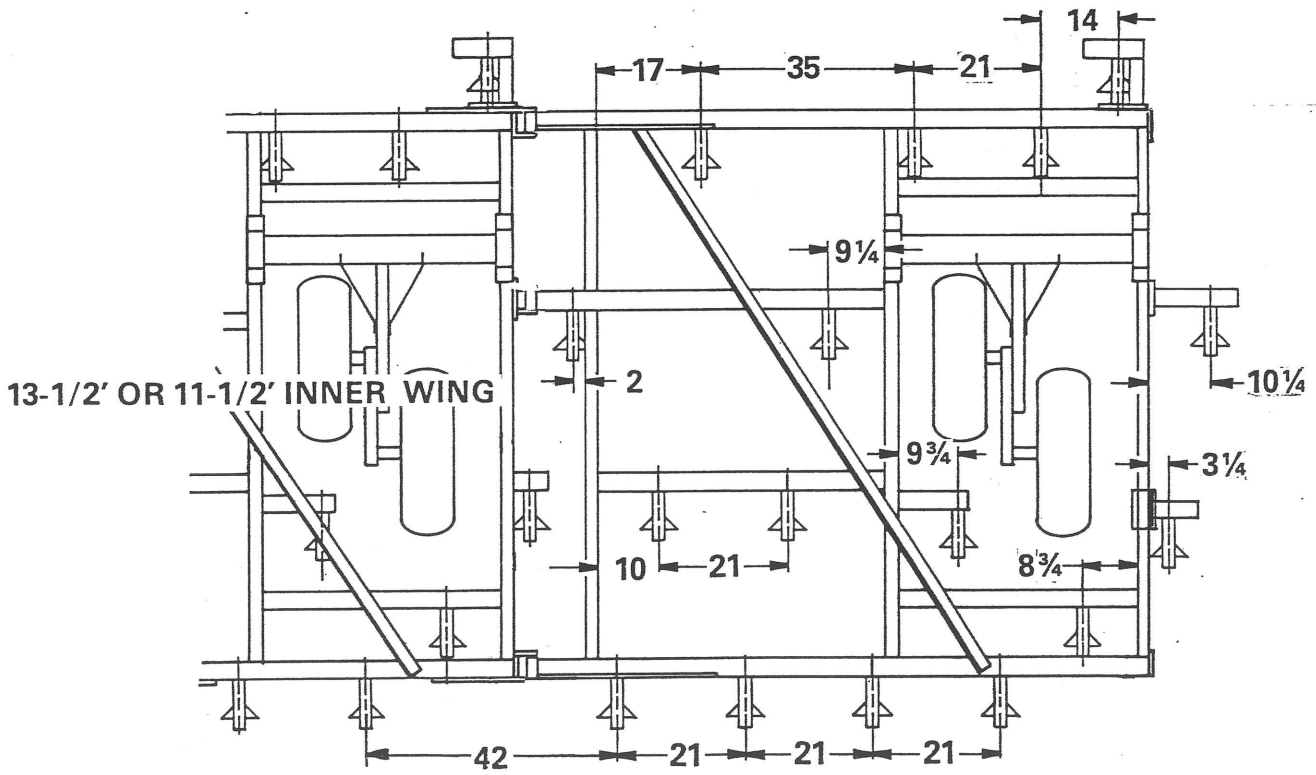

PI-75921

9' OUTER WING
(7" SPACING)

PI-76349

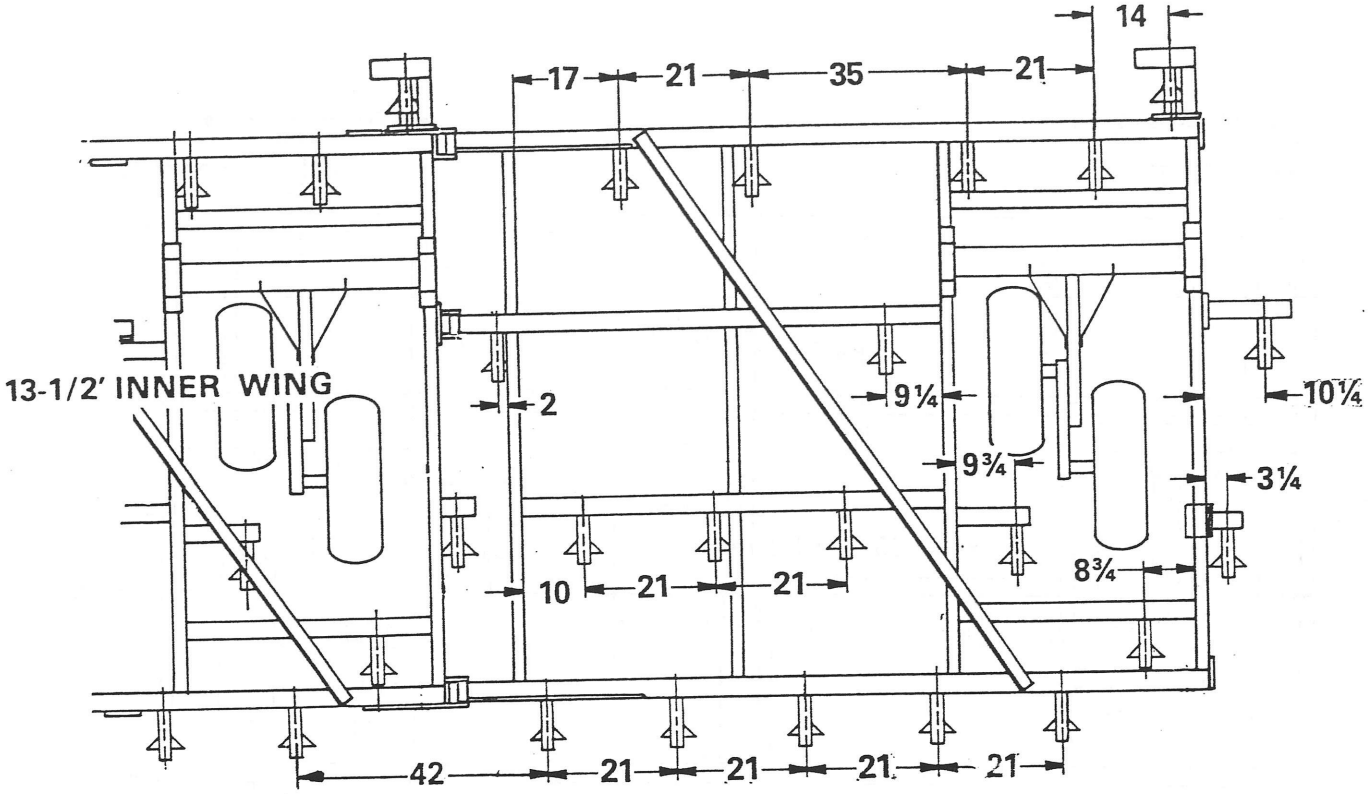

PI-75921

10-1/2' OUTER WING
(7" SPACING)

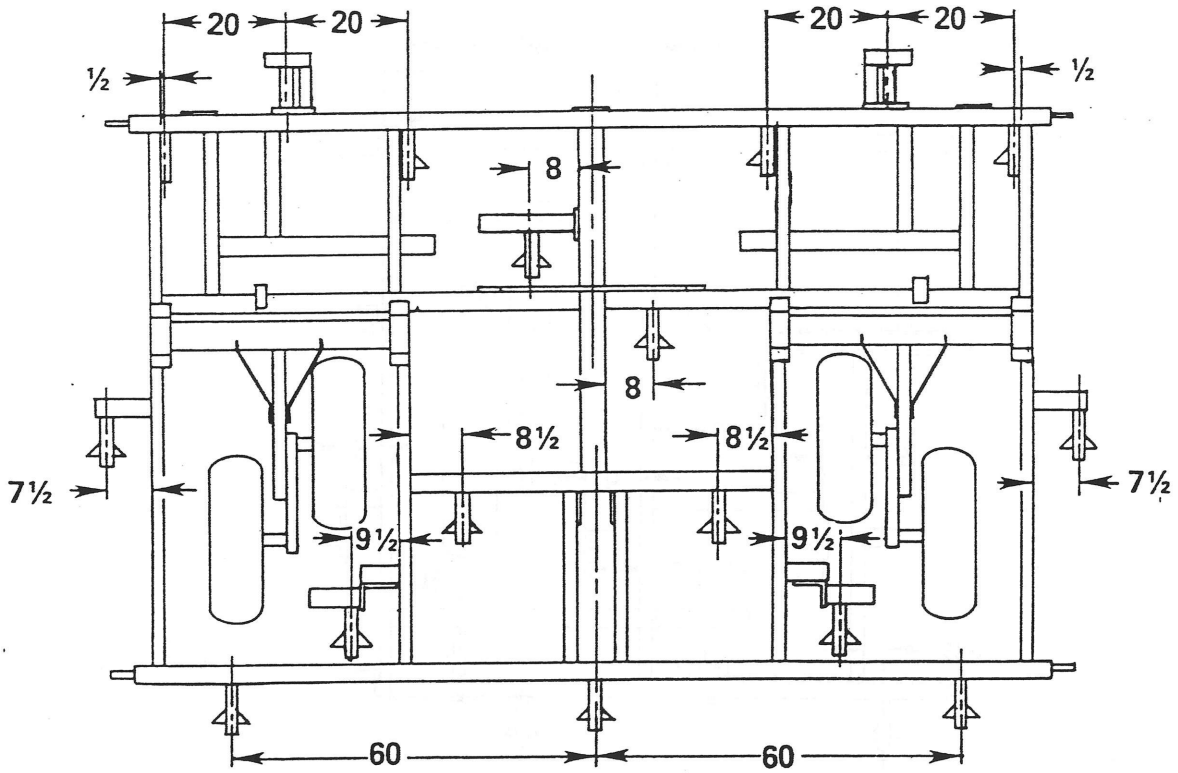

PI - 76274

13' MAIN FRAME
(10" SPACING)

PI-76349

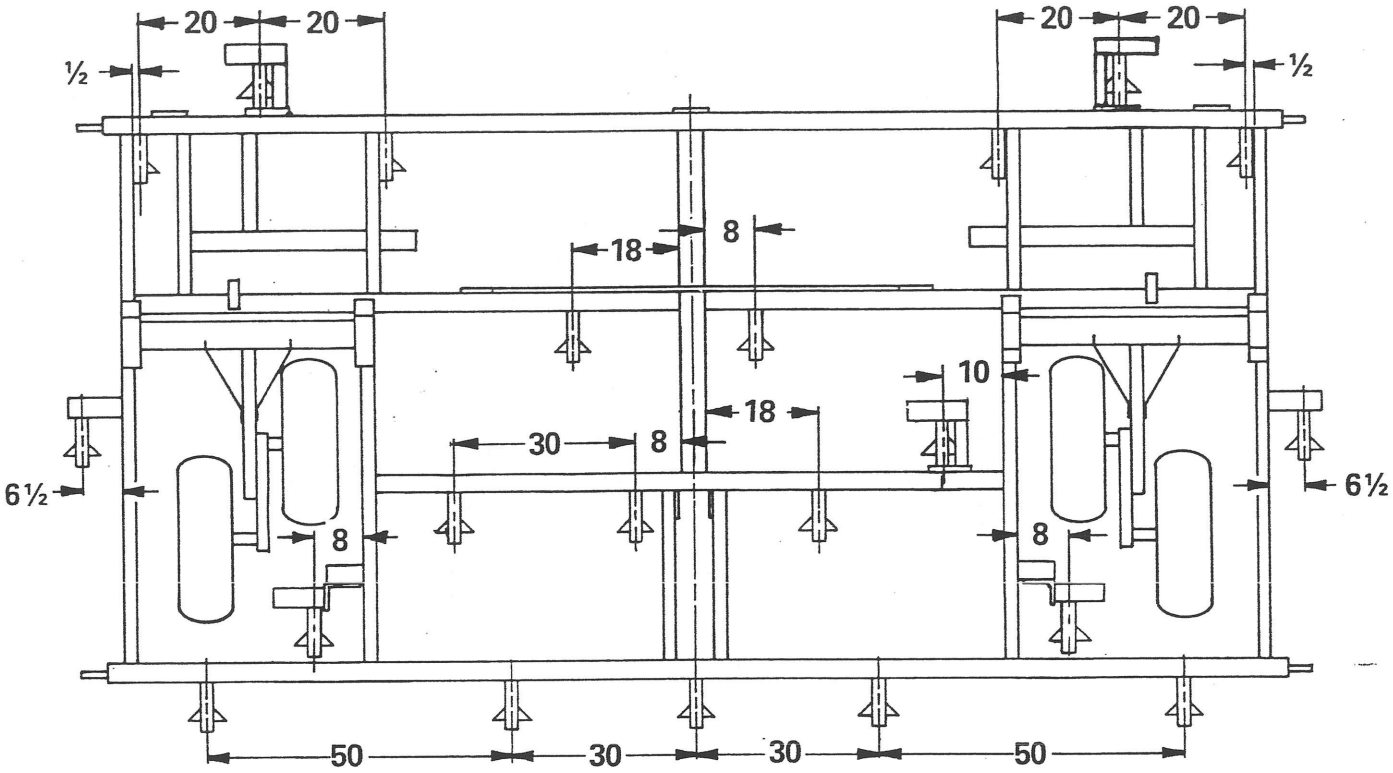

PI - 76274

17' MAIN FRAME
(10" SPACING)

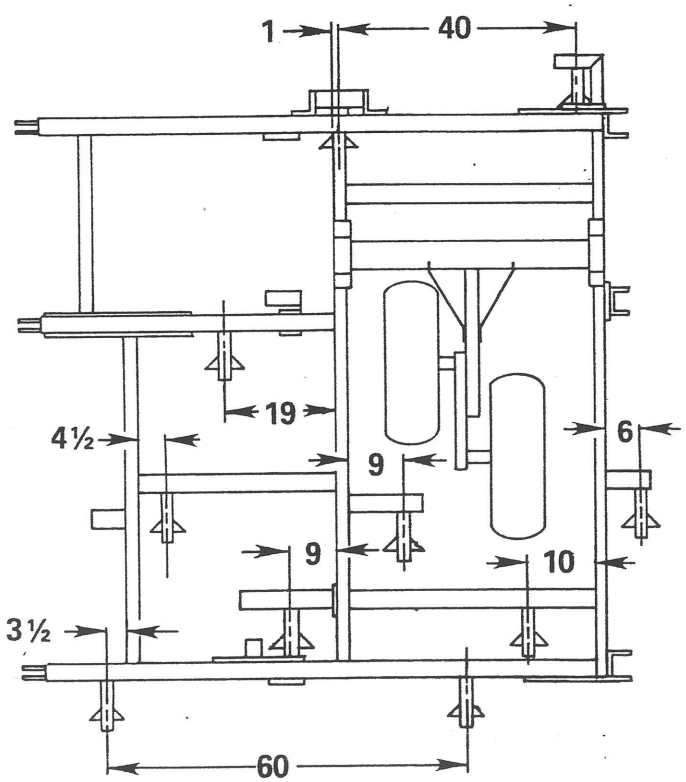

PI - 76275

8' INNER WING
(10" SPACING)

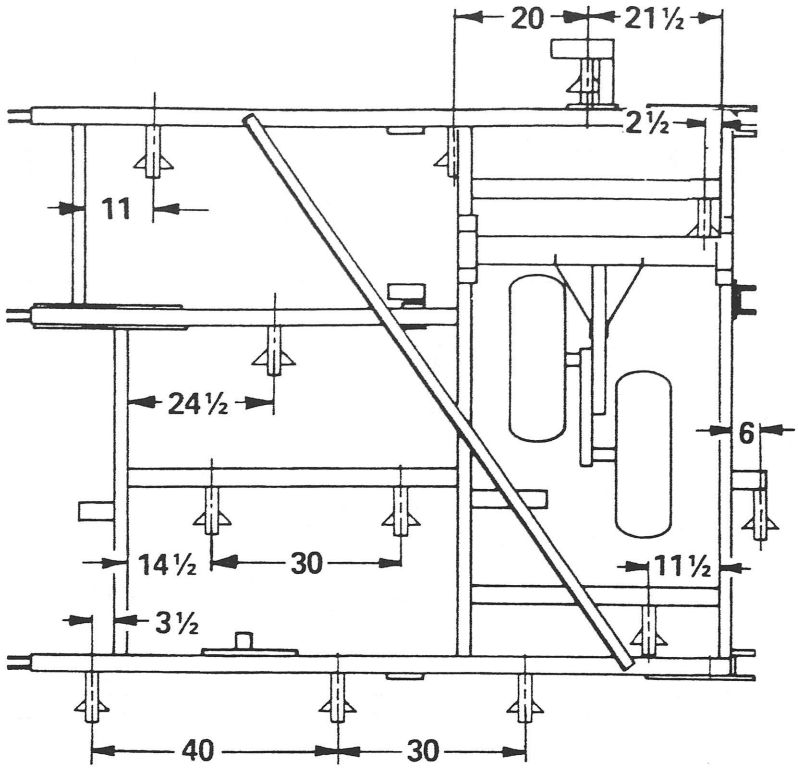

PI - 76275

10′ INNER WING
(10″ SPACING)

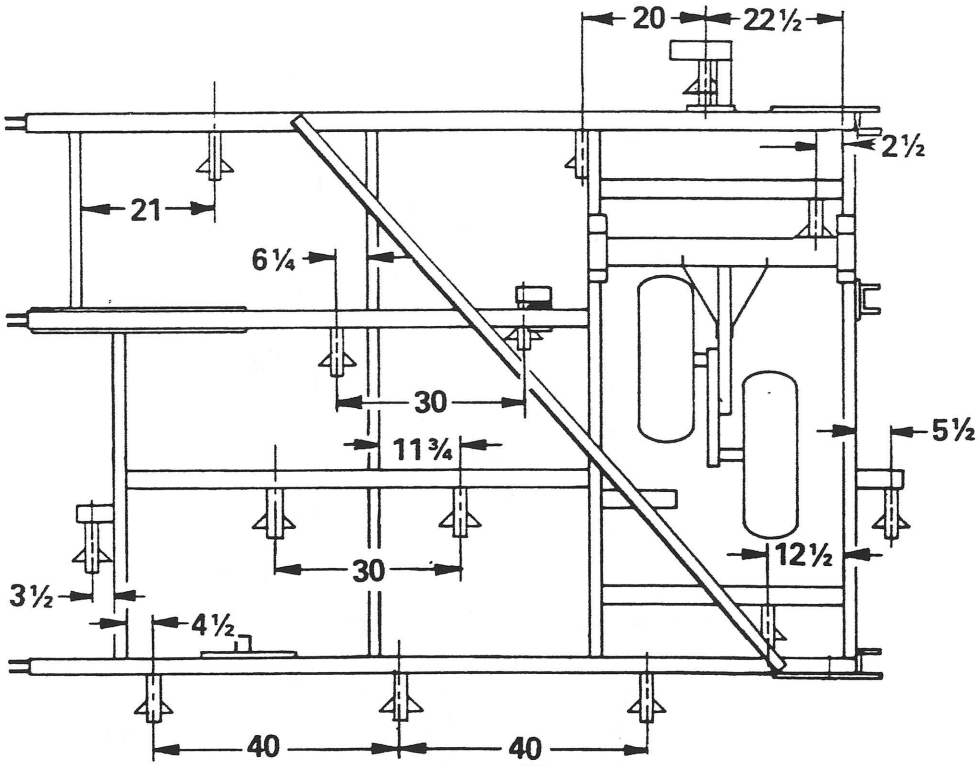

PI - 76276

11-1/2′ INNER WING
(10″ SPACING)

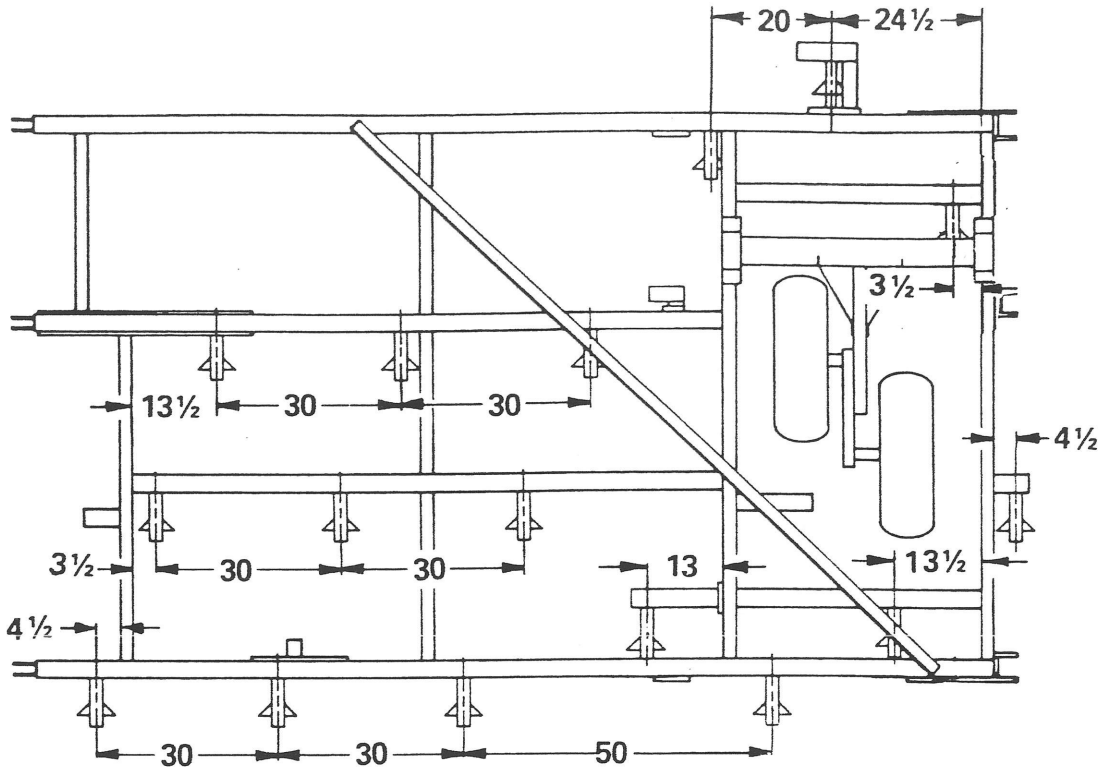

PI - 76276

13-1/2' INNER WING
(10" SPACING)

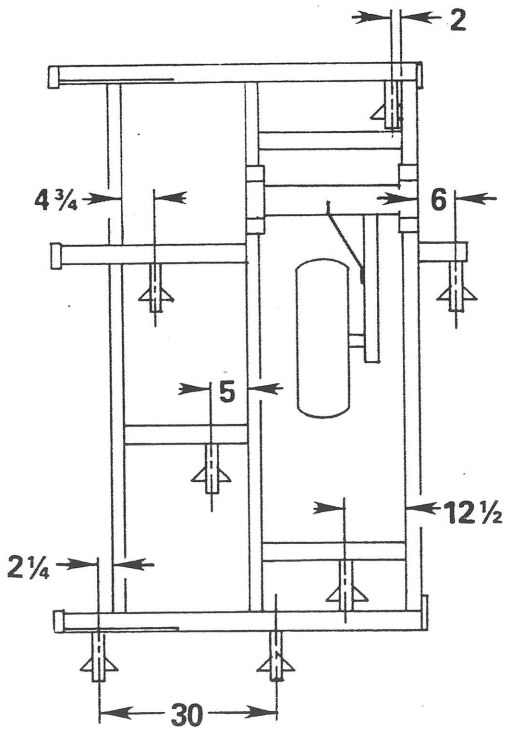

PI - 76275

5 OUTER WING
(10" SPACING)

(10" S

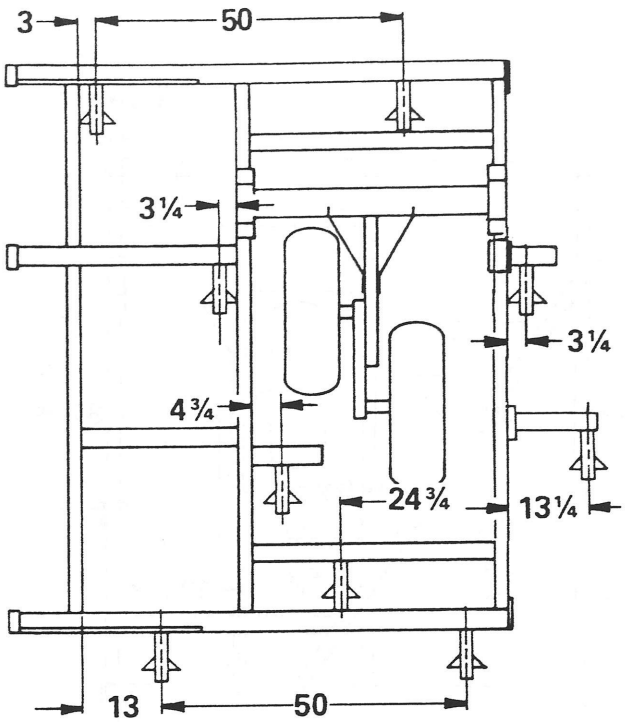

PI-75924

7' OUTER WING
(10" SPACING)

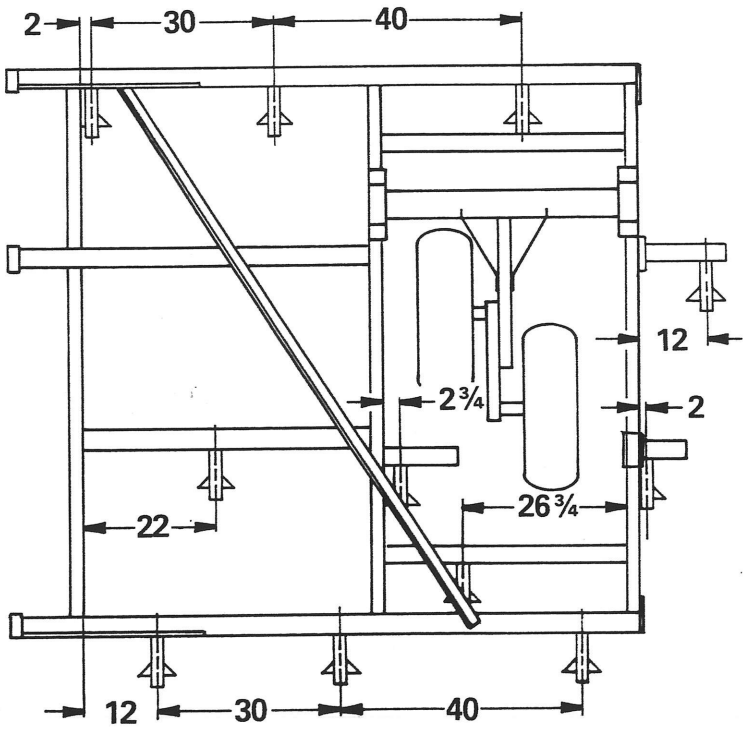

PI-75925

9' OUTER WING
(10" SPACING)

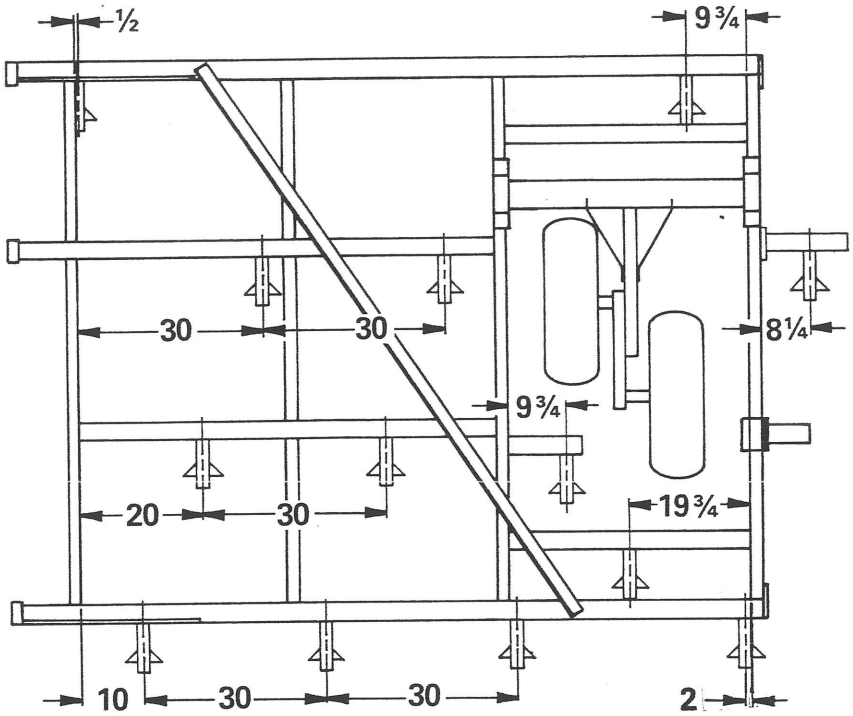

PI-75925

10-1/2' OUTER WING
(10" SPACING)