# 357 INLINE RIPPER PLUS

- MOUNTED or PULL TYPE
- 4, 5, 6, 7, 8 & 12 SHANK
- 30" SPACING

**FRAME**
4 x 6 x 3/8 in. tubular frame

**HITCH** *(3-Point or pull-type)* OPTION ***(NOT IN BASE)***
3-Point fits category II with quick hitch only or fits category III with a quick hitch or category III with free link
Pull type with hinged tongue using a 2" draw pin

**GAUGE WHEELS** – OPTION (***NOT IN BASE***)
Quick adjust lock pin design with 20.5 x 10 10-Ply tires (Pr.)

**PARKING STAND** – (***NOT IN BASE***)
Two parking stands required for 3-Pt.

**SAFETY EQUIPMENT**
Transport Warning Lights

**SHANK** –Rigid or Spring Reset OPTION ***(NOT IN BASE)***
Parabolic Shank – 1-1/4 x 3 high strength abrasion resistant steel
Minimal Disturbance Shank- 1-1/4 x 4 high strength abrasion resistant steel accepts minimal disturbance points only

**SPECIFICATIONS**
Under frame clearance – 35 inches
Operating speed 4-1/2 to 6 mph
HP (PTO) per shank – 35 to 50

**SHANK WORKING DEPTH**
Parabolic – 16 inches maximum
Minimal Disturbance – 20 inches maximum
Trip height 18"
Coulters – 7 inches maximum

***ONE ORDER NUMBER REQUIRED FROM EACH GROUP 1 THROUGH 6***

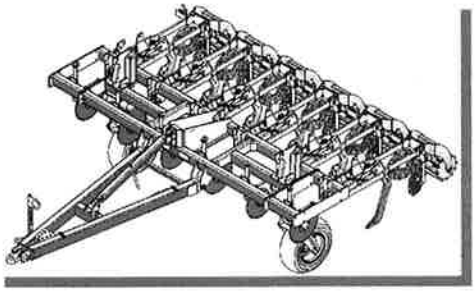

**3-Point Mounted Rigid**
(Shown with optional Pull Hitch and other options)

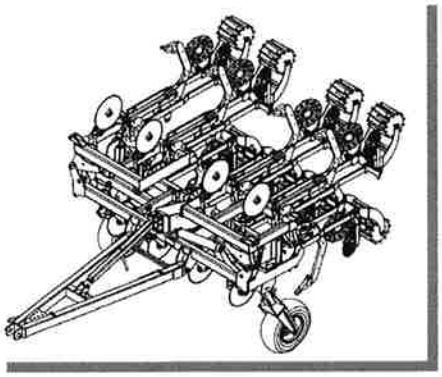

**3-Point Flat Fold**
(Shown with optional Pull Hitch and other options)

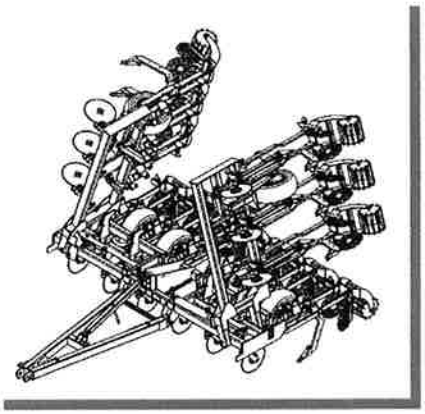

**Folding Over Center**
(Shown with options)

**GROUP 1 *(REQUIRED)*** **BASE UNIT *(Less Shanks)***

| ORDER NUMBER | QTY. | MODEL NUMBER | SHANK SPACING | CUTTING WIDTH | SHANKS NEEDED | FRAME EXT. (Pr.) | TRANSPORT WIDTH | TRANSPORT HEIGHT | APPROX. WT. (lbs.) | SUGGESTED LIST PRICE USD |
|---|---|---|---|---|---|---|---|---|---|---|
| **3-POINT MOUNTED RIGID** | | | | | | | | | | |
| 235592 | 1 | 3-5 3-Pt. 30 | 30" | 12.5' | 5 | 1' 9" | 10' 10" | — | 1222 | $ 3,888.00 |
| 352411 | 1 | 5 3-Pt. 30 | 30" | 12.5' | 5 | — | 10' 10" | — | 1190 | $ 3,744.00 |
| 235594 | 1 | 5-7 3-Pt. 30 | 30" | 17.5' | 7 | 2' 8" | 16' 2" | — | 1875 | $ 4,649.00 |
| 235593 | 1 | 4 3-Pt. 30 | 30" | 10.0' | 4 | — | 10' 10" | — | 1190 | $ 3,744.00 |
| 235596 | 1 | 4-6 3-Pt. 30 | 30" | 15.0' | 6 | 1' 9" | 14' 4" | — | 1529 | $ 4,408.00 |
| 235598 | 1 | 8 3-Pt. 30 | 30" | 20.0' | 8 | — | 20' 2" | — | 1840 | $ 4,985.00 |
| **3-POINT FLAT FOLD** (with Hydraulic Fold Cylinders and Hoses) | | | | | | | | | | |
| 236548 | 1 | 8 3-Pt. 30 | 30" | 20.0' | 8 | — | 12' 0" | 11' 0" | 2607 | $ 10,229.00 |
| **FOLDING OVER CENTER** (with Pull Type Hitch, 6 Hydraulic Gauge Wheels, Hydraulic Fold Cylinders and Hoses) | | | | | | | | | | |
| 353229 | 1 | 12 Pull 30 | 30" | 30.0' | 12 | — | 16' 5" | 15' 0" | 6909 | $ 26,105.00 |

**GROUP 2 *(REQUIRED)*** ***DECAL & MANUAL***

| | | | | |
|---|---|---|---|---|
| 353225 | 1 | Decal & Manuals Package (Wil-Rich) | 0.1 | $ 102.00 |

(Groups, 3, 4, 5, 6 & Optional Attachments and Field Conversion continued on Next Page)

# 357 INLINE RIPPER PLUS (Cont.)

**GROUP 3 *(REQUIRED)*** **SHANK HOLDER SELECTION**

| | | | | | |
|---|---|---|---|---|---|
| | 235584 | 1 | Rigid Shank -- Holder | 91 | $ 370.00 (Ea.) |
| | 355444 | 1 | Greaseless Spring Reset – Shank Holder (4250 lbs.)<br>Trip height of 18 inches | 287 | $ 1,535.00 (Ea.) |

**GROUP 4 *(REQUIRED)*** **SHANK SELECTION**

| | | | | | |
|---|---|---|---|---|---|
| 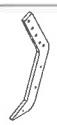 | 233739 | 1 | Minimal Disturbance Shank | 59 | $ 252.00 (Ea.) |
| | 240024 | 1 | Parabolic Shank | 45 | $ 189.00 (Ea.) |
| | 355422 | 1 | 3/4" Wide Minimal Disturbance Shank | 42 | $ 160.00 (Ea.) |

**GROUP 5 *(REQUIRED)*** **RIPPER POINT SELECTION (one required per Ripper Shank)**

| | | | | | |
|---|---|---|---|---|---|
| | 237333 | 1 | Point 7 inch Wing Cast and Guard with Hardware | 21.3 | $ 217.00 (Ea.) |
| 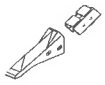 | 237334 | 1 | Point 3 inch Straight Cast and Guard with Hardware | 16.7 | $ 96.00 (Ea.) |
| 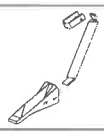 | 234196 | 1 | ***( FITS ONLY MINIMAL DISTURBANCE SHANK)***<br>Point 3 inch Straight Cast and Shin Guard with Hardware | 24.1 | $ 162.00 (Ea.) |
| | 237332 | 1 | ***( FITS ONLY MINIMAL DISTURBANCE SHANK)***<br>Point 7 inch Wing Cast and Shin Guard with Hardware | 28.5 | $ 283.00 (Ea.) |
| | 355445 | 1 | **(FITS 3/4" MINIMAL DISTURBANCE SHANK)**<br>Spacer plates, point & hardware | 29.2 | $ 161.00 (Ea.) |

(Optional Attachments and Field Conversion continued on Next Page)



ALL PRICES SHOWN ARE F.O.B. WAHPETON, NORTH DAKOTA
WIL-RICH *RESERVES THE RIGHT TO CHANGE PRICES AND SPECIFICATIONS WITHOUT NOTICE.*

Printed in USA

# 357 INLINE RIPPER PLUS (Cont.)

## OPTIONAL EQUIPMENT (Cont.)

**GROUP 6 *(REQUIRED 3-Pt Models)*** **PARKING STAND** (Two *required on 3-Pt models*)

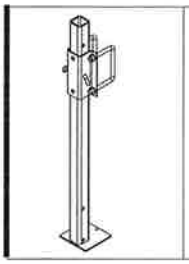

| | | | | | |
|---|---|---|---|---|---|
| 59165 | 1 | Parking Stand with Hardware (2-required for 3-Pt. Units) | 37 | $ | 108.00 (Ea.) |

## OPTIONAL EQUIPMENT

**COULTER ATTACHMENT**

| | | | | | |
|---|---|---|---|---|---|
| 234222 | 1 | 20 inch Rippled Coulter with Compression Spring (Set of 3) | 237 | $ | 1,521.00 |
| 234223 | 1 | 20 inch Rippled Coulter with Compression Spring (Set of 4) | 315 | $ | 2,028.00 |
| 234224 | 1 | 20 inch Rippled Coulter with Compression Spring (Set of 5) | 394 | $ | 2,535.00 |
| 234225 | 1 | 20 inch Rippled Coulter with Compression Spring (Set of 6) | 472 | $ | 3,042.00 |
| 234226 | 1 | 20 inch Rippled Coulter with Compression Spring (Set of 7) | 550 | $ | 3,549.00 |
| 234227 | 1 | 20 inch Rippled Coulter with Compression Spring (Set of 8) | 629 | $ | 4,056.00 |
| 234229 | 1 | 20 inch Rippled Coulter with Compression Spring (Set of 12) | 943 | $ | 6,084.00 |

**DISC LEVELER ATTACHMENT *[Fits Parabolic Shank Only]***

| | | | | | |
|---|---|---|---|---|---|
| 223232 | 1 | Disc Leveler *(One required per shank)* | 223 | $ | 880.00 |

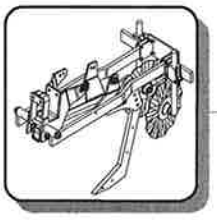

**ROW SEALER (for SLOT TILL) ATTACHMENT** *(One required per shank)*
*[will fit on units with serial number 454620 — up]*

| | | | | | |
|---|---|---|---|---|---|
| 240762 | 1 | Row Sealer, Wave Coulter ***(For Spring Reset Shank 350625)*** | 330 | $ | 915.00 |

**REEL BUSTER (for SLOT TILL ROW SEALER) ATTACHMENT**

| | | | | | |
|---|---|---|---|---|---|
| 234049 | 1 | Reel Buster *( One required per shank)*<br>14-1/14" diameter by 14-1/16" cutting width | 100 | $ | 445.00 |

**NOTE:** *You must order ROW SEALER above in order to attach this option.*

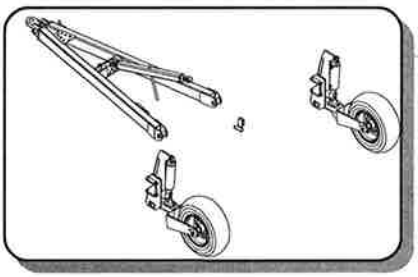

**PULL TYPE HITCH *(CONVERT 3-POINT UNITS TO PULL TYPE)***

| | | | | | |
|---|---|---|---|---|---|
| 234200 | 1 | Pull Type Hitch with hinged tongue using 2" Draw pin (2) 11L x 15 12– Ply Tires, Safely Chain and Complete with (2) 4 x 12 Hydraulic Cylinders, Hose and Fittings | 1836 | $ | 6,861.00 |

(Optional Attachments continued on Next Page)

# 357 INLINE RIPPER PLUS (Cont.)

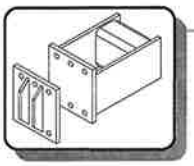

**Shank Staggering Bracket** *[Extends Shank 12" to the rear]*

| | | | | | |
|---|---|---|---|---|---|
| 62324 | 1 | Shank Staggering Bracket with Attaching Hardware | 68 | $ | 283.00 |

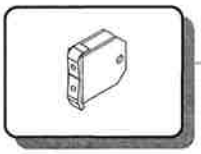

**Attaching Bracket** *[for Parabolic Shank Only ]*

| | | | | | |
|---|---|---|---|---|---|
| 60789 | 1 | Attaching Bracket for 7 inch Furrower with Attaching Hardware | 5.2 | $ | 30.00 |

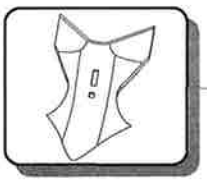

**Furrower** *[for Parabolic Shank Only ]*

| | | | | | |
|---|---|---|---|---|---|
| 60920 | 1 | 7 inch Furrower with Attaching Hardware<br>*(Requires Attaching Bracket #60789)* | 5.7 | $ | 19.00 |

**Gauge Wheel** *[REQUIRED with 3-Point Units]*
*[ NOT REQUIRED with Hitch 234200 or Hitch 234276]*

| | | | | | |
|---|---|---|---|---|---|
| 66149 | 1 | Gauge Wheel with 20.5 x 10 10-Ply Rated (Pr.)<br>with Attaching Hardware | 194 | $ | 1,112.00 |

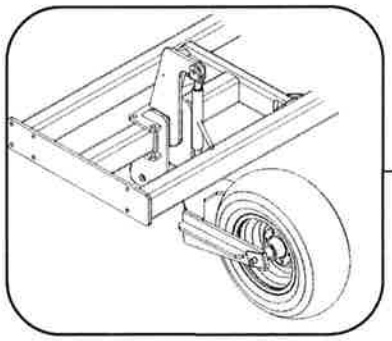

**Gauge Wheel** (Heavy Duty)
*[NOT REQUIRED with Hitch 234200, REQUIRED with 3 point units]*

| | | | | | |
|---|---|---|---|---|---|
| 355447 | 1 | Gauge Wheel with 2 11L X 15 8 ply tires | 703 | $ | 3,000.00 |



ALL PRICES SHOWN ARE F.O.B. WAHPETON, NORTH DAKOTA
WIL-RICH *RESERVES THE RIGHT TO CHANGE PRICES AND SPECIFICATIONS WITHOUT NOTICE.*

Printed in USA